BALDOR
A MEMBER OF THE ABB GROUP

BALDOR • RELIANCE

Product Information Packet

L5009A

1HP,3450RPM,1PH,60HZ,56,X3524L,XPFC,F1

Copyright © All product information within this document is subject to Baldor Electric Company copyright © protection, unless otherwise noted.

Part Detail							
Revision:	BH	**Status:**	PRD/A	**Change #:**		**Proprietary:**	No
Type:	AC	**Prod. Type:**	3524L	**Elec. Spec:**	35WG0498	**CD Diagram:**	CD0008
Enclosure:	XPFC	**Mfg Plant:**		**Mech. Spec:**	35E353	**Layout:**	35LYE353
Frame:	56	**Mounting:**	F1	**Poles:**	02	**Created Date:**	06-27-2007
Base:	RG	**Rotation:**	R	**Insulation:**	B	**Eff. Date:**	06-24-2016
Leads:	4#16 A&J,2#18 B PH,1#14 #4TH					**Replaced By:**	
Literature:		**Elec. Diagram:**					

BALDOR A MEMBER OF THE ABB GROUP

Nameplate NP0016XPSL

NO.		CC				
SER.						
SPEC.	35E353-498					
CAT.NO.	L5009A					
HP	1	T. CODE	T4			
VOLTS	115/230					
AMPS	12/6					
RPM	3450					
HZ	60	PH	1	CL	B	
SER.F.	1.00	DES	N	CODE	K	
RATING	40C AMB-CONT					
FRAME	56	NEMA-NOM-EFF	66			
USABLE AT 208V		PF	81			
BLANK						

BALDOR
A MEMBER OF THE ABB GROUP

AC Induction Motor Performance Data

Record # 30814 - Typical performance - not guaranteed values

Winding: 35WG0498-R002	**Type:** 3524L	**Enclosure:** XPFC

Nameplate Data				230 V, 60 Hz: High Voltage Connection	
Rated Output (HP)	1			Full Load Torque	1.51 LB-FT
Volts	115/230			Start Configuration	direct on line
Full Load Amps	12/6			Breakdown Torque	4.97 LB-FT
R.P.M.	3450			Pull-up Torque	2.74 LB-FT
Hz	60	Phase	1	Locked-rotor Torque	4.24 LB-FT
NEMA Design Code	N	KVA Code	K	Starting Current	37.9 A
Service Factor (S.F.)	1			No-load Current	2.95 A
NEMA Nom. Eff.	66	Power Factor	81	Line-line Res. @ 25ºC	2.572 Ω A Ph 1.8019 Ω B Ph
Rating - Duty	40C AMB-CONT			Temp. Rise @ Rated Load	49°C

Load Characteristics 230 V, 60 Hz, 1 HP

% of Rated Load	25	50	75	100	125	150
Power Factor	51	66	76	82	85	88
Efficiency	48.2	63.2	68.3	70.6	70.1	68
Speed	3563.8	3541.1	3515.3	3483.1	3445.7	3401.4
Line amperes	3.28	3.83	4.58	5.59	6.75	8.09

BALDOR A MEMBER OF THE ABB GROUP

Performance Graph at 230V, 60Hz, 1.0HP Typical performance - Not guaranteed values

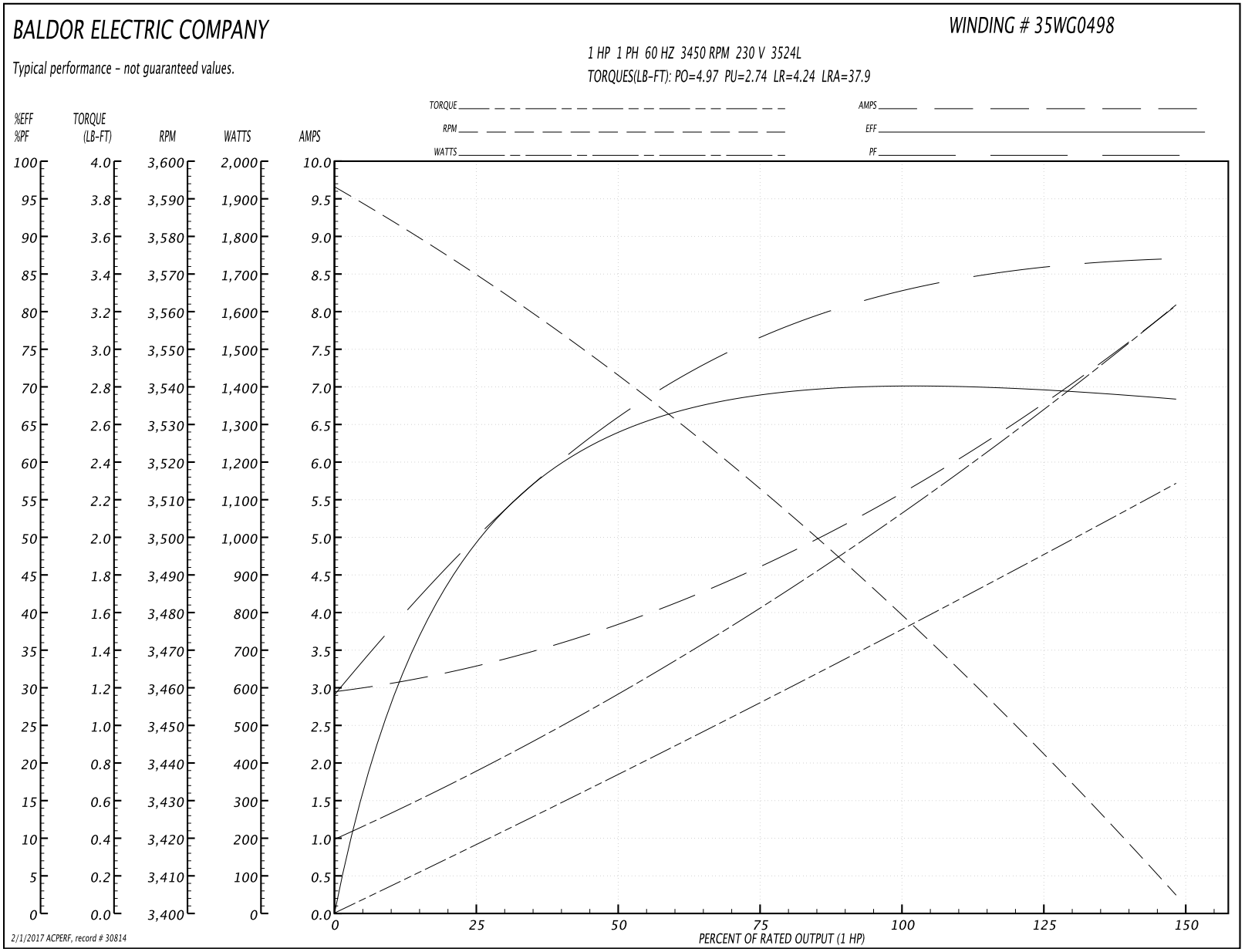

BALDOR
A MEMBER OF THE ABB GROUP

AC Induction Motor Performance Data

Record # 59849 - Typical performance - not guaranteed values

Winding: 35WG0498-R002	**Type:** 3524L	**Enclosure:** XPFC

Nameplate Data				115 V, 60 Hz: Low Voltage Connection	
Rated Output (HP)	1			Full Load Torque	1.51 LB-FT
Volts	115/230			Start Configuration	direct on line
Full Load Amps	12/6			Breakdown Torque	4.97 LB-FT
R.P.M.	3450			Pull-up Torque	2.74 LB-FT
Hz	60	Phase	1	Locked-rotor Torque	4.24 LB-FT
NEMA Design Code	N	KVA Code	K	Starting Current	75.8 A
Service Factor (S.F.)	1			No-load Current	5.9 A
NEMA Nom. Eff.	66	Power Factor	81	Line-line Res. @ 25ºC	0.643 Ω A Ph 1.8019 Ω B Ph
Rating - Duty	40C AMB-CONT			Temp. Rise @ Rated Load	49°C

Load Characteristics 115 V, 60 Hz, 1 HP

% of Rated Load	25	50	75	100	125	150
Power Factor	51	66	76	82	85	88
Efficiency	48.2	63.2	68.3	70.6	70.1	68
Speed	3563.8	3541.1	3515.3	3483.1	3445.7	3401.4
Line amperes	6.56	7.66	9.16	11.18	13.5	16.18

BALDOR A MEMBER OF THE ABB GROUP

Performance Graph at 115V, 60Hz, 1.0HP Typical performance - Not guaranteed values

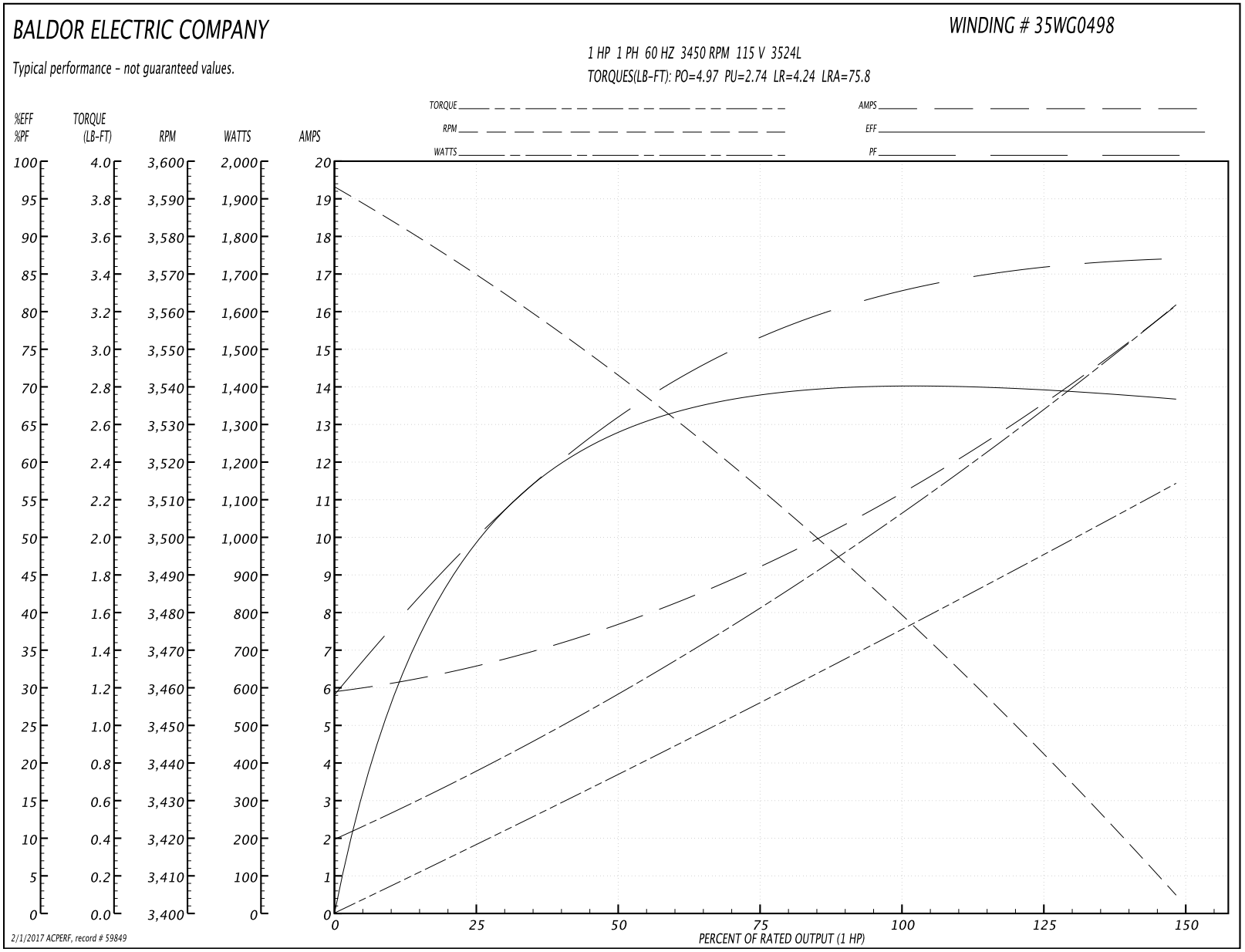

BALDOR
A MEMBER OF THE ABB GROUP

35LYE353

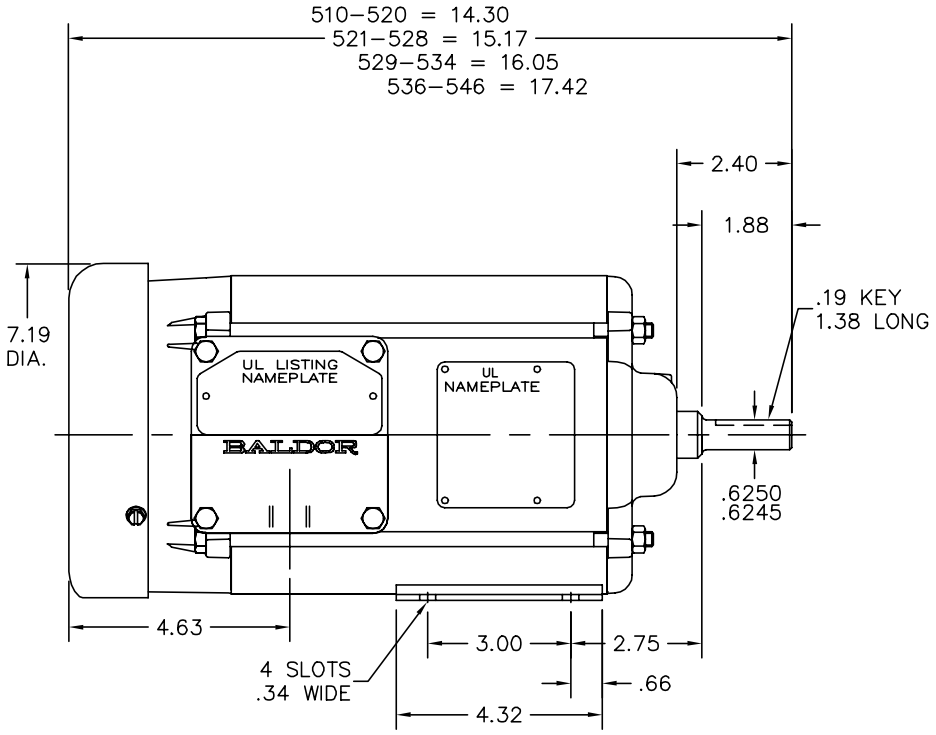

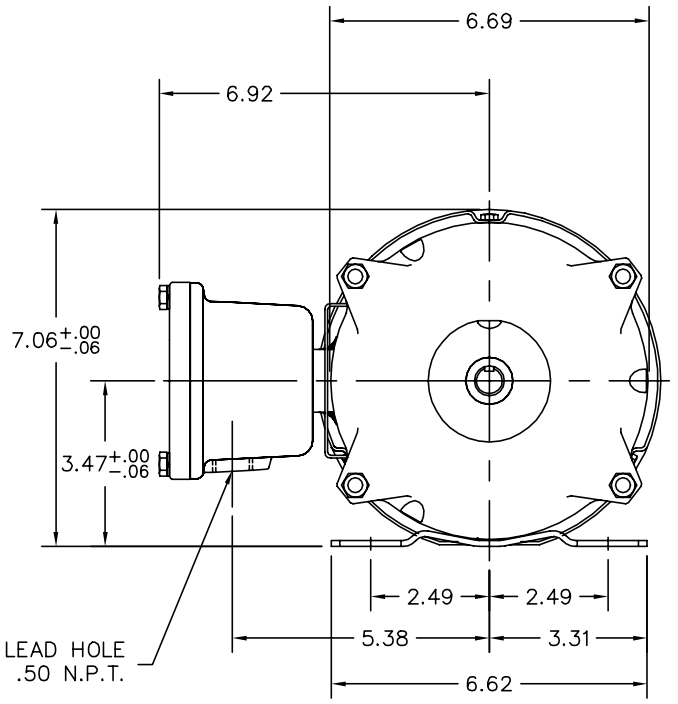

35LYE353

CUSTOMER IS RESPONSIBLE FOR DETERMINING THAT BALDOR'S PRODUCT WILL PERFORM SUITABLY IN THE INTENDED APPLICATION.

REV. DESC: UPDATE DESCRIPTION & CLEAN UP LINES IN LAYOUT		
REV. LTR: G	VERSION: 02	TDR: 000000995565
FILE: \AAA\00005\186	REVISED: 10:38:52 09/06/2016	BY: ENERINO
MTL: –		

BALDOR

STD HORZ 56 TEFC X35L–LC CL–I GP–D, CL–II GP–F&G

SH 1 of 1

BALDOR
A MEMBER OF THE ABB GROUP

CD0008

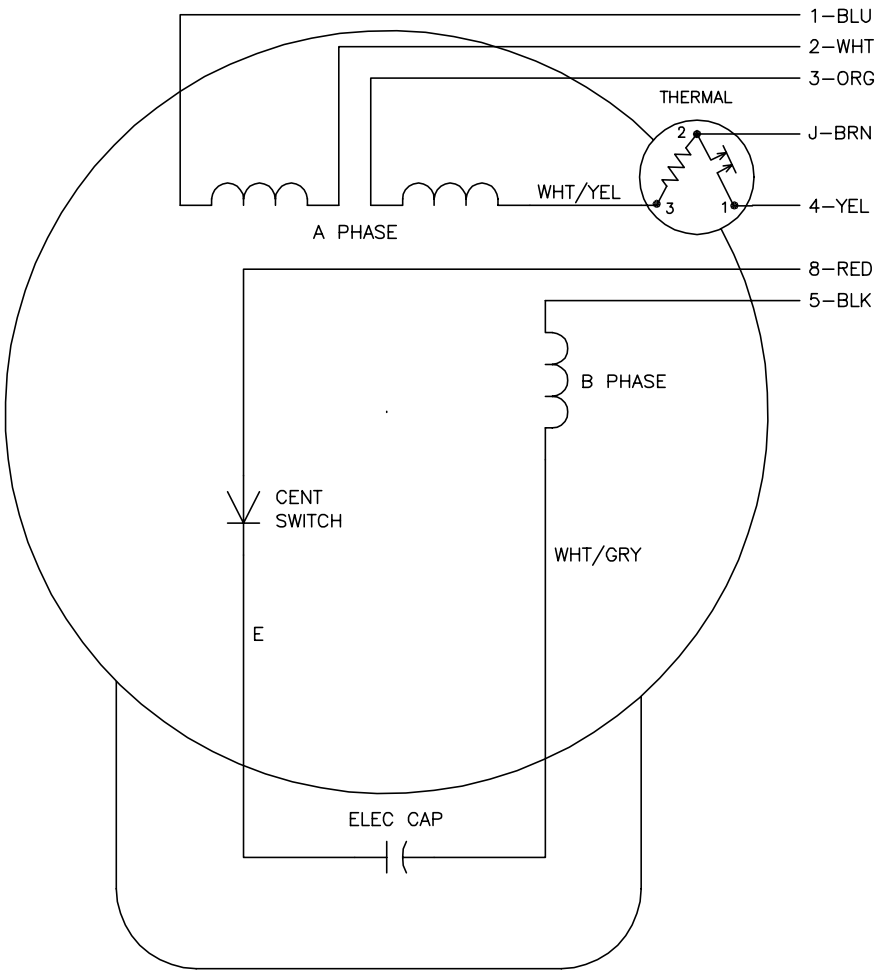

	LINE A	LINE B	JOIN	JOIN
HIGH STD	1	4	2,3,8	J,5
HIGH OPP	1	4	2,3,5	J,8
LOW STD	1,3,8	4	–	2,J,5
LOW OPP	1,3,5	4	–	2,J,8

NOTES:

1. STANDARD ROTATION IS CCW FACING END OPPOSITE SHAFT EXTENSION.
2. MULTIPLE CAPACITORS ARE CONNECTED IN PARALLEL UNLESS OTHERWISE SPECIFIED.
3. LEAD COLORS ARE OPTIONAL. LEADS MUST ALWAYS BE NUMBERED AS SHOWN.

CD0008

REV. DESC: REMOVE 2–TERMINAL THERMAL DETAIL, SEE CD0008A02			BALDOR ELECTRIC Co.
REV. LTR: F	VERSION: 01	TDR: 000000360649	
CD0008	FILE: \AAA\00007\408	REVISED: 10:56:54 04/18/2005	TYPE L, DV, REV, THERMAL, 7 LEADS
	MTL: –	BY: ENJOEPO	

BALDOR A MEMBER OF THE ABB GROUP