IEC Pin and Sleeve

20A, 125V, 2 Pole, 3 Wire

Watertight Receptacle

Features

- Corrosion-resistant self-closing gasketed cover
- Sequential contact engagement to prevent a momentary over-voltage on components
- Super tough insulated non metallic house for impact and chemical resistance
- Color coded housings for easy identification
- Multi contact spring provides and maintains high unit pressure on mating pins to minimize temperature rise



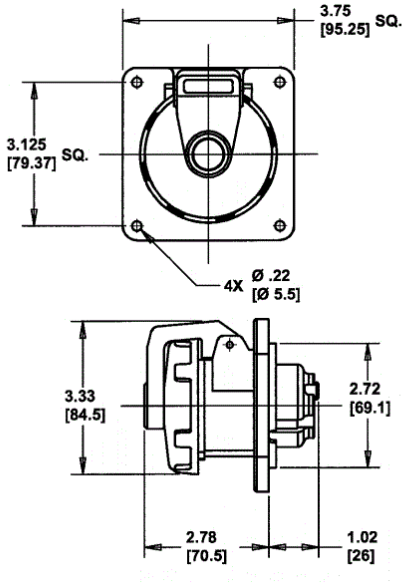

Ordering Information

Description	UPC	Catalog Number
Watertight IEC Pin and Sleeve Receptacle	783585403427	**HBL320R4W**

Device Color
Yellow

Standards

UL Listed, File E146032
CSA StandardC22.2 No. 182.1
UL Classified to IEC 60309-1 IEC 60309-2

Specifications

Housing	Zytel® 101 Nylon
Mounting Flange	Zytel® 101 Nylon
Cover	Reinforced Thermoplastic Polyester
Gaskets	Solid Neoprene
Cover Screw	Nickel-plated brass

Performance

Electrical

Current Interrupting	Certified for current interrupting at full rated current
Dielectric Voltage	3000V AC
Max. Working Voltage	600V RMS
Temperature Rise	Max. 30°C temperature rise at full rated current after 50 cycles of overload at 150% of rated current at a power factor of 75%

Mechanical

Impact Resistance	Per CSA C22.2 No.182.1 /UL1682
Product Identification	Identification and ratings are a permanent part of the device housing
Terminal Identification	Terminals identified in accordance with North American and IEC conventions

Environmental

Flammability	HB or better per UL 94 or CSA C22.2 No. 0.17
Ingress Protection	IP67 Suitability
Moisture Resistance	Watertight per IEC 60309-1
Operating Temperatures	Maximum Continuous 75°C; Minimum - 40°C w/o impact

Accessories

Back Boxes
Cover Assemblies

Online Resources

Customer Use Drawing
eCatalog
Installation Instructions

Dimensions in Inches (mm)

Hubbell Wiring Device-Kellems • Hubbell Incorporated (Delaware) • 40 Waterview Drive • Shelton, CT 06484
Phone (800) 288-6000 • Fax (800) 255-1031 • Specifications subject to change without notice.

Wiring Device-Kellems