**Switched Disconnects and Enclosures**

# Circuit-Lock® NEMA 1 Enclosures without Switch

## Features

- All aluminum cover and base
- Base is pre-drilled for rear surface mounting
- Top, bottom or back wire entry points
- Switch can be locked in the OFF position as a method of compliance with OSHA lockout/tagout



## Ordering Information

| Description | UPC Number | Catalog Number |
|---|---|---|
| For use with 30A switch, Aluminum | 783585016986 | **HBL1370** |

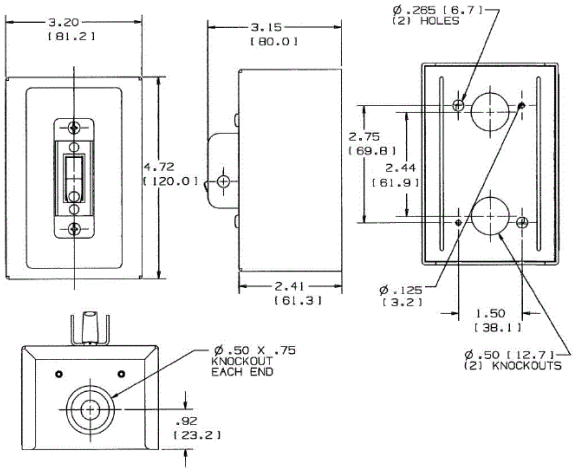


## Specifications

| | |
|---|---|
| Cover Material | Aluminum |
| Base Material | Aluminum |

## Complementary Products

| | |
|---|---|
| Controllers/Disconnects | HBL7832D; HBL7832DS; HBL7832DX; HBL7810D; HBL7810DS |

## Online Resources

Customer Use Drawing
eCatalog
Installation Instructions

Dimensions in Inches (mm)



Wiring Device-Kellems