JUNO

6" ECONOMY UNIVERSAL IC HOUSING

INCANDESCENT LAMPS

IC22 SERIES

Project:

Fixture Type:

Location:

Contact/Phone:

PRODUCT DESCRIPTION

IC Air-Loc® Housing • Energy efficient, sealed housing • Can be completely covered with insulation • When used with Air-Loc Gasket accessory or pre-installed gasket, stops infiltration and exfiltration of air, reducing heating and cooling costs • Trims shown with Air-Loc symbol AIR-LOC do not require a gasket.

PRODUCT SPECIFICATIONS

Lamp Lamp ratings based on trim selected – see page 2.

Socket Medium base porcelain with nickel-plated copper screw shell • Adjustable socket plate and detachable socket with snap-in springs to accommodate various lamp and trim combinations • Socket plate secured at two points for consistent, straight lamp positioning.

Trims Trim selection shown on page 2.

Labels UL listed for through-branch wiring, damp locations and IP • Product thermally protected against improper use of lamps • UL Listed/CSA certified • Trims 239, 241 and 242 are wet location approved for covered ceiling applications • Trims 28, 29 are wet location approved for covered ceiling applications, **when used with outdoor rated lamps**.

Testing All reports are based on published industry procedures; field performance may differ from laboratory performance.

Note: Specifications subject to change without notice.

INSTALLATION

Real Nail® Bar Hangers Telescoping, Patented (US Patent D552,969) Real Nail 3 and Real Nail 2 systems permits quick placement of housing anywhere within 24" O.C. joists or suspended ceilings • Bars scored in two locations for fast, clean breaking, allowing housing installation in tight applications • Bars captive to mounting frame • Edge-mounted for extra strength • Quick-Loc slot (location identified on the mounting frame) and oversized locking set screw lock fixture in position • May be installed either perpendicular or parallel to junction box.

Real Nail 3 Bar Hanger Integral T-bar notch and clip secures housing in suspended ceiling grid – no accessory clips required • 24" expansion stop allows quick placement of fixture in standard grid spacing • Captive bugle-headed ring shank nail for quick one-step installation and easy removal with claw hammer for fixture relocation • Bar hanger foot contoured to align to bottom of construction joist • Alternate mounting holes included.

Real Nail 2 Bar Hanger (S options) Small bar hanger foot designed to install directly on strapping construction material • Features Real Nail captive nail system for quick one-step installation • G2405 accessory clips required for suspended ceiling installation.

Junction Box Pre-wired junction box provided with (5) ½" and (1) ¾" knockouts, (4) Non-metallic sheathed cable connectors and ground wire, U.L. listed/CSA certified for through-branch wiring, maximum 8 No. 12 AWG 90° C branch circuit conductors (4 in, 4 out) • Junction box provided with removable access plates • Knockouts equipped with pryout slots • **W options** are supplied with **push-in electrical connectors** for fast installation

Mounting Frame 22-gauge die-formed galvanized steel mounting frame • Rough-in section (junction box, mounting frame, housing and bar hangers) fully assembled for ease of installation • Sight lines embossed on mounting frame to allow for easy viewing when aligning fixtures • Pre-installed Air-Loc gasket for **G options**.

Housing IC housing, .032" aluminum sealed for Air-Loc Compliance • Housing is vertically adjustable to accommodate up to a 1" ceiling thickness.

DIMENSIONS

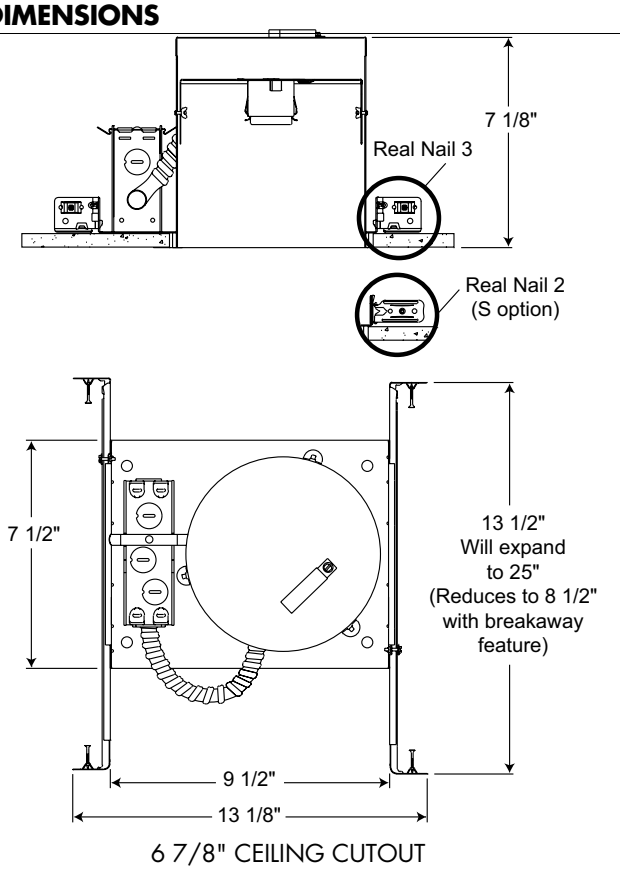

Warranty 1-year limited warranty. This is the only warranty provided and no other statements in this specification sheet create any warranty of any kind. All other express and implied warranties are disclaimed. Complete warranty terms located at: www.acuitybrands.com/support/warranty/terms-and-conditions.

Note: Actual performance may differ as a result of end-user environment and application. Specifications subject to change without notice.

Accessories

Catalog Number	Description
ALG6	Air-Loc Gasket
G2405	T-Bar Clips (Set of 4), for S option only

To order, specify catalog number.

PRODUCT CODES

Housing and trim can be ordered together or separate, but will always ship separately.

Catalog Number		Input Voltage	Lamp Rating
IC22	6" Incandescent New Construction IC Housing	120V	A19/BR30/BR40/PAR16/PAR20/PAR30/PAR30L/PAR38/R20 (See page 2 for max. trim rating)
IC22 G	6" Incandescent New Construction IC Housing with pre-installed Air-Loc gasket	120V	A19/BR30/BR40/PAR16/PAR20/PAR30/PAR30L/PAR38/R20 (See page 2 for max. trim rating)
IC22 S	6" Incandescent New Construction IC Housing with smaller footprint bar hanger (Real Nail 2)	120V	A19/BR30/BR40/PAR16/PAR20/PAR30/PAR30L/PAR38/R20 (See page 2 for max. trim rating)
IC22 S G	6" Incandescent New Construction IC Housing with smaller footprint bar hanger (Real Nail 2) and pre-installed Air-Loc gasket	120V	A19/BR30/BR40/PAR16/PAR20/PAR30/PAR30L/PAR38/R20 (See page 2 for max. trim rating)
IC22 S W	6" Incandescent New Construction IC Housing with smaller footprint bar hanger (Real Nail 2) and push-in electrical connectors for fast, secure installation	120V	A19/BR30/BR40/PAR16/PAR20/PAR30/PAR30L/PAR38/R20 (See page 2 for max. trim rating)
IC22 W	6" Incandescent New Construction IC Housing with push-in electrical connectors for fast, secure installation	120V	A19/BR30/BR40/PAR16/PAR20/PAR30/PAR30L/PAR38/R20 (See page 2 for max. trim rating)
IC22 W G	6" Incandescent New Construction IC Housing with push-in electrical connectors and pre-installed Air-Loc gasket	120V	A19/BR30/BR40/PAR16/PAR20/PAR30/PAR30L/PAR38/R20 (See page 2 for max. trim rating)

 © 2017-2025 Acuity Brands Lighting, Inc.

6" ECONOMY UNIVERSAL IC HOUSING

INCANDESCENT LAMPS

IC22 SERIES

TRIMS/LAMPS

	Catalog Number	Description	Max. Lamp Rating
**	**24 BWH**	Black Baffle, White Trim Ring	50W PAR30,
	24 BSC	Black Baffle, Satin Chrome Trim Ring	75W PAR30L,
	24 BBRZ	Black Baffle, Bronze Trim Ring	65W BR30
	24 BBL	Black Baffle, Black Trim Ring	
	24 WWH	White Baffle, White Trim Ring	
**	**25 BWH**	Black Baffle, White Trim Ring	50W PAR30,
	25 BSC	Black Baffle, Satin Chrome Trim Ring	65W BR30
	25 BBRZ	Black Baffle, Bronze Trim Ring	
	25 BBL	Black Baffle, Black Trim Ring	
	25 WWH	White Baffle, White Trim Ring	
AIR-LOC	**28 BWH ◆◆**	Black Baffle, White Trim Ring	60W A19, 65W BR30,
	28 WWH ◆◆	White Baffle, White Trim Ring	75W PAR30/30L,
			90W PAR38, 90W BR40
AIR-LOC	**29 CWH ◆◆**	Clear Cone, White Trim Ring	60W A19, 65W BR30,
	29 WWH ◆◆	White Cone, White Trim Ring	75W PAR30/30L,
			90W PAR38, 90W BR40
**	**27 CWH**	Clear Alzak® Cone, White Trim Ring	50W PAR30,
	27 GWH	Gold Cone, White Trim Ring	75W PAR30L,
	27 BWH	Black Cone, White Trim Ring	65W BR30
	27 PTSC	Pewter Cone, Satin Chrome Trim Ring	
	27 WWH	White Cone, White Trim Ring	
	27 HZWH	Haze Cone, White Trim Ring	
	27 WHZWH	Wheat Haze Cone, White Trim Ring	
	27 WHZBRZ	Wheat Haze Cone, Bronze Trim Ring	
AIR-LOC **	**244S BWH**	Black Baffle, White Trim Ring	75W PAR30L,
	244S WWH	White Baffle, White Trim Ring	60W PAR30,
			65W BR30
AIR-LOC **	**247S CWH**	Clear Alzak® Cone, White Trim Ring	75W PAR30L,
	247S BWH	Black Alzak® Cone, White Trim Ring	65W BR30,
	247S HZWH	Haze Cone, White Trim Ring	75W PAR30
	247S WHZWH	Wheat Haze Cone, White Trim Ring	
	250 WH	Open Frame, White	65W BR30
	250 BRZ	Open Frame, Bronze	
	226 WWH	Cylinder Spotlight, White Baffle, White Trim Ring	
	229 WH	Regressed Eyeball, White	75W PAR30L,
	229 SC	Regressed Eyeball, Satin Chrome	65W BR30
	229 BRZ	Regressed Eyeball, Bronze	
	229 BL	Regressed Eyeball, Black	
	249 BWH	Regressed Eyeball, Black Baffle, White Trim Ring	75W PAR30L,
	249 WWH	Regressed Eyeball, White Baffle, White Trim Ring	65W BR30
**	**264 WWH**	Adjustable, White Baffle, White Trim Ring	
**	**267 CWH**	Clear Alzak® Cone, White Trim Ring	50W PAR30
	267 HZWH	Haze Cone, White Trim Ring	
	267 WHZWH	Wheat Haze Cone, White Trim Ring	
AIR-LOC	**239 WH ◆**	Frosted Lens, White	40W A19
AIR-LOC	**241 WH ◆**	Drop Opal w/Reflector, White	40W A19
	241 PW ◆	Drop Opal w/Reflector, Plastic White	
AIR-LOC	**242 WH ◆**	Frosted Lens w/Clear Center, White	45W PAR38
	242 SC ◆	Satin Chrome	
	242 BRZ ◆	Bronze	

Trim Size: 7⅝" O.D. (except Cat. Nos. 229, 241, - 8" O.D.).
Alzak is a registered trademark of Alcoa Corp.
Note: In Canada when insulation is present, Type IC fixtures must be used.

AIR-LOC JUNO IC housings meet IECC Energy Code requirements per ASTM E283.

Air-Loc® rated trims are pre-gasketed for minimum air leakage with IC housings.

◆ UL Listed for use in wet location.

◆◆ UL Listed for use in wet location with outdoor rated lamp.

** NOTE: TR6 Trim Ring compatible with 24, 25, 27, 244S, 247S, 264, 267 trims.

Housing and trim can be ordered together or separate, but will always ship separately.

 © 2017-2025 Acuity Brands Lighting, Inc.