ND6R26D/E2



Easy to install 6" rough-in with die-cast aperture ring, removable driver, thermal protector and adjustable butterfly brackets. This rough-in is designed to make new construction recessed downlighting easy .

Weight: 7.5 lbs

Project:	**Type:**
Prepared By:	**Date:**

Driver Info

Type	Constant Current
120V	0.24A
208V	0.14A
240V	0.13A
277V	0.12A
Input Watts	See Trim Module*

LED Info

Watts	26W
Color Temp	N/A
Color Accuracy	90 CRI
L70 Lifespan	N/A
Lumens	See Trim Module*
Efficacy	See Trim Module*

Technical Specifications

Compliance

UL Listed:
Suitable for wet locations covered ceiling

Energy Star Approved:
ENERGY STAR® Version 2.0 Certified

Construction

Housing Component:
This component must be ordered with New Construction Round Trim Module in order to make a complete fixture.
See here for New Construction Round Trim Module.

Ambient Temperature:
Suitable for use in up to 40°C (104°F)

Cold Weather Starting:
The minimum starting temperature is -40°C (-40°F)

Aperture Size:
6" Rough-In

Drop Ceiling Installation:
NDLED can be installed in drop ceiling tiles when using optional c-channel bars and following local construction codes

Junction Box:
Integral junction box with wiring capacity for
Min 90°C supply conductors
4 in 4 out

Air Tight:
Housing certified Air Tight as per ASTM E283

Mounting:
Housing includes nailer bars and butterfly brackets. Brackets also accommodate mounting with 1/4" to 1/2" bar stock, C channel or 1/2" conduit.

Easy Installation:
The EZConnector makes installation easy

Thermal Protector:
Thermal protector included. Disables power if temperature exceeds safe operation levels.

Electrical

Driver:
ELV, 0-10V and TRIAC Dimming, Constant Current, Class 2, 120V-277V, 50/60Hz, Power Factor 98%, THD ≤ 20%

Dimming Driver:
0 - 10V (at 120-277V), TRIAC and ELV (at 120V only).
See dimmer compatibility guide here.

Battery Backup:
Battery backup will operate the LED Lamp for 90 minutes if power fails. Wired for 120V.

Battery Backup Light Loss Factor:
0.48

Performance

Wattage Equivalency:
Equivalent to 100W PAR

Other

Warranty:
RAB warrants that our LED products will be free from defects in materials and workmanship for a period of five (5) years from the date of delivery to the end user, including coverage of light output, color stability, driver performance and fixture finish. RAB's warranty is subject to all terms and conditions found at rablighting.com/warranty.

Buy American Act Compliance:
RAB values USA manufacturing! Upon request, RAB may be able to manufacture this product to be compliant with the Buy American Act (BAA). Please contact customer service to request a quote for the product to be made BAA compliant.

Copyright © 2024 RAB Lighting All Rights Reserved Note: Specifications are subject to change at any time without notice

ND6R26D/E2

Dimensions

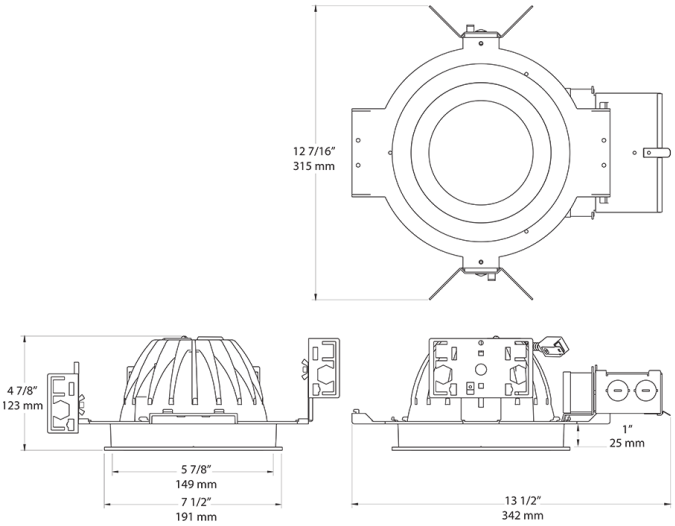

Features

- Butterfly bracket allows mounting with bar stock, "C" channel, 1/2" conduit or nailer bars
- Low-profile design allows for installation in ceilings with limited space
- Sturdy design with die cast aperture frame

Ordering Matrix

Family	Type	Size	Shape	Wattage	Driver	Battery Backup	Lightcloud
ND		6	R	26	D	/E2	
	Blank = Standard **IC =** Insulation Contact	**6 =** 6"	**R =** Round	**20 =** 20W **26 =** 26W	**D =** Universal Dimming	**Blank =** No Battery Backup **/E2 =** 120-277V Backup	**Blank =** No Lightcloud® **/LC =** Lightcloud Controller

Copyright © 2024 RAB Lighting All Rights Reserved Note: Specifications are subject to change at any time without notice