STAINLESS STEEL FOLDING SHELF

Supports instruments and test equipment used to install and maintain electrical components in an enclosure. Also ideally suited for supporting laptop computers, monitoring units and other equipment used with programmable controllers. The shelf can be installed on the inside or outside surface of larger nVent HOFFMAN industrial enclosures (except ProLine). Automatically locks in the horizontal position when raised. When not in use, the shelf folds down and projects only 1 in. (25 mm) from the mounting surface. Dpotusvdufe!pg!415!tubjomftt!tuffm!xjui!b!csvtife!Åojti/!Nbjoubjot! UL/CSA Type 4, 4X and 12 rating when properly installed on an nVent HOFFMAN enclosure.

BULLETIN: A80

Catalog Number	Size AxB in./mm	Maximum Distributed Load Rating (lb.)	Maximum Distributed Load Rating (kg)
ACSHELF1212SS	12.00 x 12.00 305 x 305	150	68
ACSHELF1818SS	18.00 x 18.00 457 x 457	150	68
ACSHELF2424SS	24.00 x 24.00 610 x 610	150	68

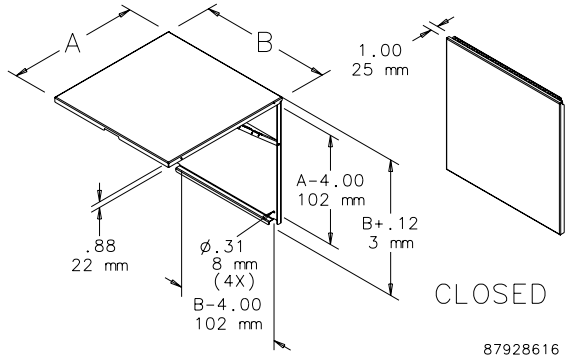

LARGE FOLDING SHELF

Supports instruments and test equipment used to install and maintain electrical components in an enclosure. Also ideally suited for supporting laptop computers, monitoring units and other equipment used with programmable controllers. The shelf can be installed on the inside or outside surface of larger nVent HOFFMAN industrial enclosures (except ProLine). Automatically locks in the horizontal position when raised. When not in use, the shelf folds to 1.73 in. (44 mm) from the mounting surface. All parts are heavy gauge steel. Maintains UL/CSA Type 4 and 12 when properly intalled on an nVent HOFFMAN enclosure.

Catalog Number	Size AxB in./mm	Maximum Distributed Load Rating (lb.)	Maximum Distributed Load Rating (kg)	Finish
AASHLF1218	18.00 x 12.00 457 x 305	150	68	White
AA61SHLF1218	18.00 x 12.00 457 x 305	150	68	Gray
AA35SHLF1218	18.00 x 12.00 457 x 305	150	68	Light gray
AASHLF1818	18.00 x 18.00 457 x 457	150	68	White
AA61SHLF1818	18.00 x 18.00 457 x 457	150	68	Gray
AA35SHLF1818	18.00 x 18.00 457 x 457	150	68	Light gray
AASHLF2424	24.00 x 24.00 610 x 610	150	68	White
AA61SHLF2424	24.00 x 24.00 610 x 610	150	68	Gray
AA35SHLF2424	24.00 x 24.00 610 x 610	150	68	Light gray

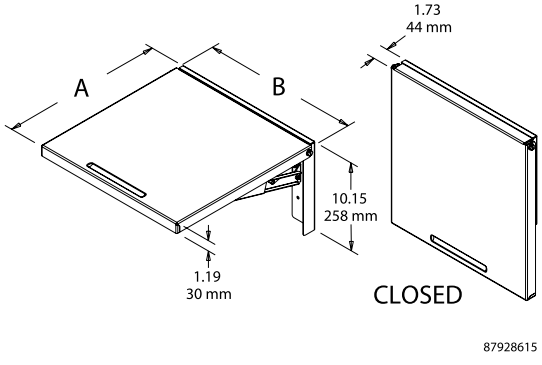

DOUBLE-SIDED SOLID ALUMINUM SHELF

Mounts on 19-in. open frame rack. Two shelves form double-sided shelf. Uses 4U rack space. Made of 0.090-in. thick aluminum with csvt i fe!Åojt i/!
Maximum load rating: 100 lb. (45.4 kg) per side, 200 lb. (90.7 kg) total

BULLETIN: DACCY

Catalog Number	H x W x D in./mm	Fits Rack	Includes	Rack Units
ESHDA19	5.62 x 19.31 x 9.37 143 x 490 x 238	19 in.	2 shelves	4

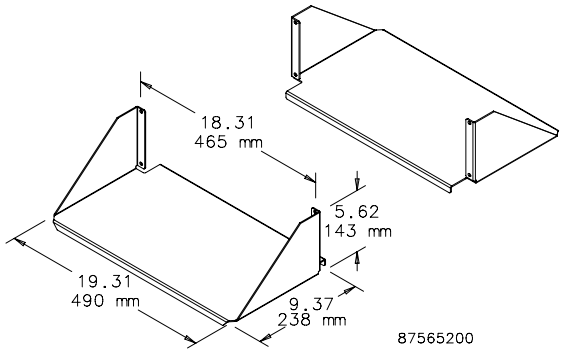

DOUBLE-SIDED, SOLID ALUMINUM, HEAVY DUTY SHELF

Mounts on open frame rack. Two shelves form double-sided shelf. Uses 4U rack space. Made of 0.090-in. thick aluminum with brushed Åojt i/!
Maximum Load Rating: 150 lb. (68.0 kg) per side, 300 lb. (136.1 kg) total

BULLETIN: DACCY

Catalog Number	H x W x D in./mm	Fits Rack	Includes	Rack Units
ESHDHDA19	6.37 x 19.31 x 10.00 162 x 490 x 254	19 in.	2 shelves	4

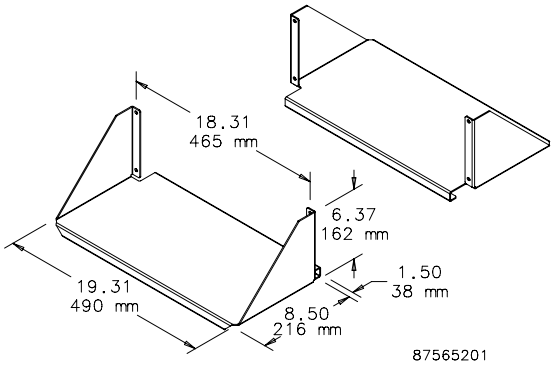

SINGLE-SIDED SOLID ALUMINUM SHELF

Mounts in a cabinet or on a 19-in. open-frame rack and can be wall n pvou fe/!Nbef!pg!1/1:1.jo/!u ijdl!bnv n jov n!xju i!csvt i fe!Åojt i/!
Maximum load rating: 100 lb. (45.4 kg)

BULLETIN: DACCY

Catalog Number	H x W x D in./mm	Fits Rack	Rack Units
ESHA19	5.25 x 18.31 x 15.00 133 x 465 x 381	19 in.	3

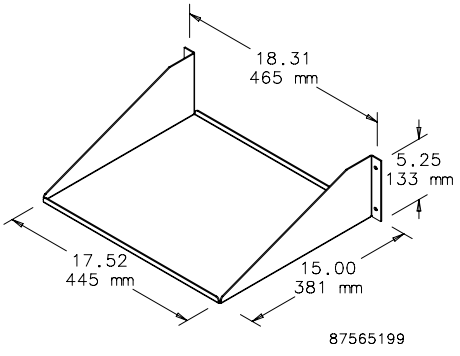

SINGLE-SIDED SOLID-STEEL SHELF

Tpmje!t i fng! n pvou!up!fju i fs!gspou!ps!sfbs!Åbohf!pg!pqfo.gsb n f!sbdl/!
Vtft!4V!pg!sbdl!tqbdf/!Tuf fm!xju i!ufyuvsfe!cmbdl!Åojt i/!
Load rating: 150 lb. (68.0 kg)

BULLETIN: DACCY

Catalog Number	H x W x D in./mm	Fits Rack	Rack Units
ESH19S	4.85 x 19.00 x 10.50 123 x 483 x 267	19 in.	3
ESH23S	4.85 x 23.00 x 10.50 123 x 584 x 267	23 in.	3

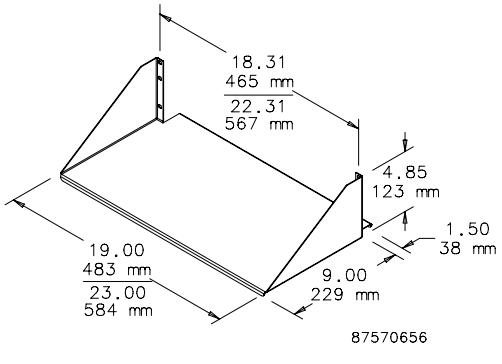

SINGLE-SIDED STEEL VENTED SHELF

Wfou fe!t i fmg! n pvout!up! fju i fs!gspou!ps!sfbs!ábohf!pg!pqfo.gsb n f! sbdl/!Tuf fm!xju i !ufyuvsfe!cmbdl!qpxefs!qbjou!Åojt i/!
Load rating: 150 lb. (68.0 kg)

BULLETIN: DACCY

Catalog Number	H x W x D in./mm	Fits Rack	Rack Units
ESH19V	4.85 x 19.00 x 10.50 123 x 483 x 267	19 in.	3
ESH23V	4.85 x 23.00 x 10.50 123 x 584 x 267	23 in.	3

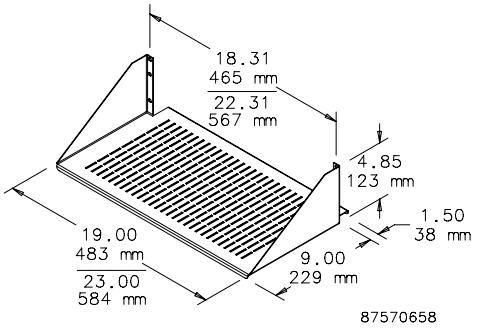

DOUBLE-SIDED SOLID-STEEL SHELF

Tpmje!epvcmf.ef fq!t i fmg! n pvout!up!cpui !gspou!boe!sfbs!ábohf t!pg! open frame rack. Steel with textured black polyester powder paint Åojt i/!
Load rating: 300 lb. (136.1 kg)

BULLETIN: DACCY

Catalog Number	H x W x D in./mm	Fits Rack	Rack Units
ESHD19	4.85x 19.00 x 10.50 123 x 483 x 267	19 in.	3
ESHD23	4.85 x 23.00 x 10.50 123 x 584 x 267	23 in.	3

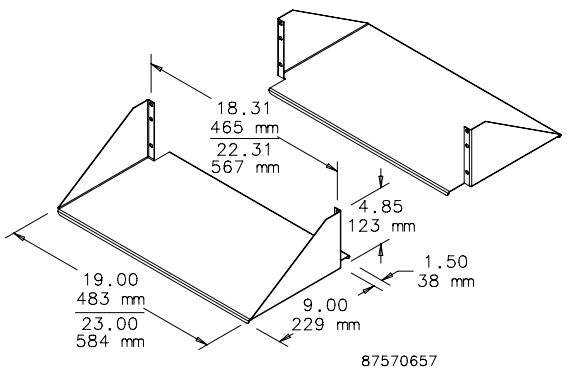

DOUBLE-SIDED STEEL VENTED SHELF

Wfou fe-!epvcmf.ef fq!t i fmg! n pvout!up!cpui !gspou!boe!sfbs!ábohf t!pg! open frame rack. Steel with textured black polyester powder paint Åojt i/!
Load rating: 300 lb. (136.1 kg)

BULLETIN: DACCY

Catalog Number	H x W x D in./mm	Fits Rack	Rack Units
ESHDV19	4.85 x 19.00 x 10.50 123 x 483 x 267	19 in.	3
ESHDV23	4.85 x 23.00 x 10.50 123 x 584 x 267	23 in.	3

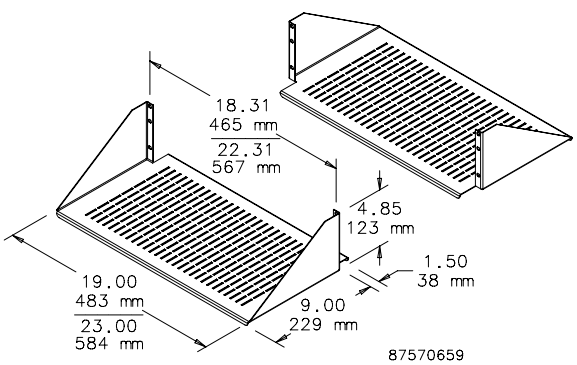

CENTER-MOUNT STEEL SHELVES

19-in. shelf mounts to the front of the rack. Ideal for supporting monitors or computers. Designed to evenly distribute load across the rack. Manufactured from 16 gauge steel. Black, low-gloss, light-ufyuvsfe!qpxefs!qbjou!Åojt i !po!bm!tvsgbdf t/!
Load rating: 100 lb. (45.4 kg)

BULLETIN: DOFRC

Catalog Number	H x W x D in./mm	Style	Rack Units
ECMS1918	3.50 x 19.00 x 18.00 89 x 483 x 457	Solid	2
ECMS1922	3.50 x 19.00 x 22.00 89 x 483 x 559	Solid	2
ECMSV1918	3.50 x 19.00 x 18.00 89 x 483 x 457	Vented	2
ECMSV1922	3.50 x 19.00 x 22.00 89 x 483 x 559	Vented	2

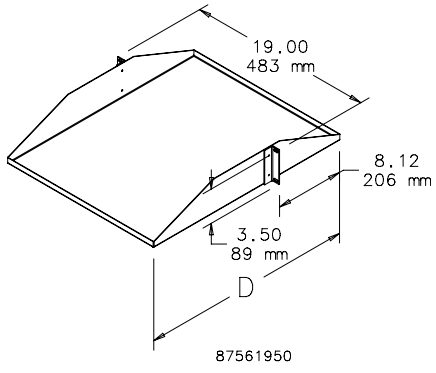

RACK-MOUNT STEEL SHELF

19-in. Rack-Mount Shelf mounts to the front of the rack. Ideal for holding non-19-in. rack-mount equipment. Available with or without vents. Manufactured from 16 gauge steel. Black, low-gloss, lightly-ufyuvsfe!Åojt i!po!bmm!tvsgbdf t/!
Load rating: 100 lb. (45.4 kg)

BULLETIN: DOFRC

Catalog Number	H x W x D in./mm	Style	Rack Units
EMS1918	5.25 x 19.00 x 18.00 133 x 483 x 457	Solid	3
EMS1922	5.25 x 19.00 x 22.00 133 x 483 x 559	Solid	3
EMSV1918	5.25 x 19.00 x 18.00 133 x 483 x 457	Vented	3
EMSV1922	5.25 x 19.00 x 22.00 133 x 483 x 559	Vented	3

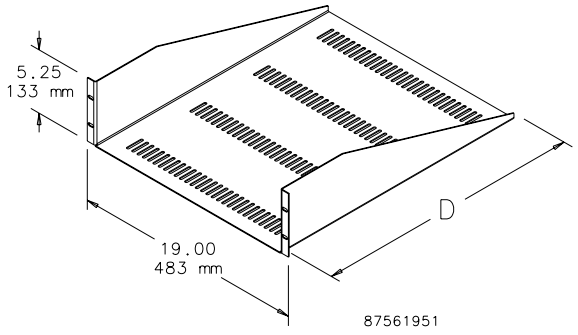

ADJUSTABLE STEEL VENTED SHELF

Vented shelf adjustable front to back in 25-mm increments. Shelf n pvout!up!fjui fs!gspou!ps!sfbs!åbohf!pg!pqfo!gsbn f!sbdl/!Tuf fm!xjui! ufyuvsfe!cmbdl!qpmzf tufs!qpxefs!qbjou!Åojt i/!
Load rating: 60 lb. (27.2 kg)

BULLETIN: DACCY

Catalog Number	H x W x D in./mm	Fits Rack	Rack Units
ESHVA19	3.50 x 16.93 x 15.75 89 x 430 x 400	19 in.	2
ESHVA23	3.50 x 19.93 x 15.75 89 x 506 x 400	23 in.	2

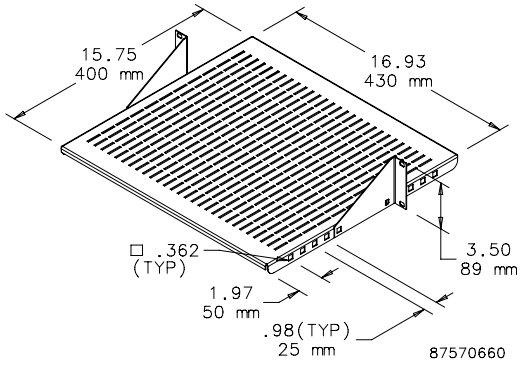

PULLOUT KEYBOARD TRAY WITH MONITOR SHELF

Mounts to the front and back surfaces of a standard 3-in. open frame rack. Fits full-size keyboard. Includes mouse tray. Extends 10.5 in. (267 mm) beyond front of open frame rack. Keyboard tray slides out an additional 7 in. (178 mm). Uses 4U rack space. 16 hbvhf!tuffm!xjui!SBM!:116!cmbdl!qpmzftufs!qpxefs!qbjou!Åojt i/!
Monitor shelf load rating: 100 lb. (45.4 kg)

BULLETIN: DACCY

Catalog Number	H x W x D in./mm	Fits Rack	Rack Units
E19SKBM	7.00 x 19.90 x 10.24 178 x 505 x 260	19 in.	4

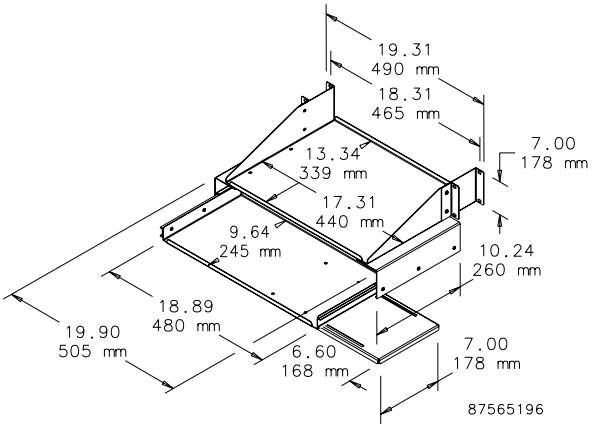

PULL-OUT SHELF FOR MINI KEYBOARD

Pull-Out Shelf for Mini Keyboard mounts either in a cabinet or on a 2: .jo/!pqfo.gsbn f!sbdl!boe!Åut!b!27/36.jo/!)524. n n*!xjef!l fzcpbse/! When closed, all parts slide between rack angles. Keyboard tray slides out 8.94 in. (227 mm). 16 gauge steel with RAL 9005 black qpmzftufs!qpxefs!qbjou!Åojt i/

BULLETIN: DACCY

Catalog Number	H x W x D in./mm	Fits Rack	Rack Units
P19KBSM	3.50 x 18.31 x 12.42 89 x 465 x 315	19 in.	2

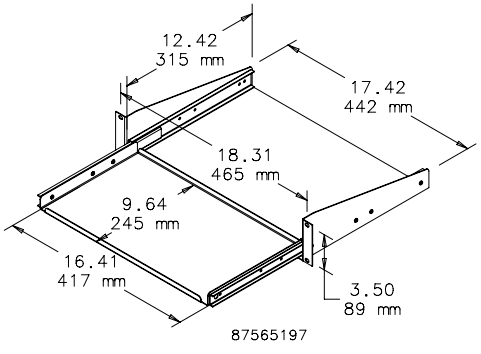

PIVOTING KEYBOARD SHELF WITH MOUSE TRAY

Mounts either in a cabinet or on a 19-in. open-frame rack. Shelf pulls out and pivots 90 degrees to access full-size keyboard. Shelf allows keyboard to slide between standard rack angles and includes mouse tray. 16 gauge steel with RAL 9005 black polyester powder qbjou!Åojt i/!Lfzcpbse!usbz!fyufoet!:/86!jo/!)359!n n*!cfzpoe!gspou!pg! rack angles or open-frame rack.

BULLETIN: DACCY

Catalog Number	H x W x D in./mm	Fits Rack	Rack Units
P19KBPVT	3.50 x 18.89 x 19.25 89 x 480 x 489	19 in.	2

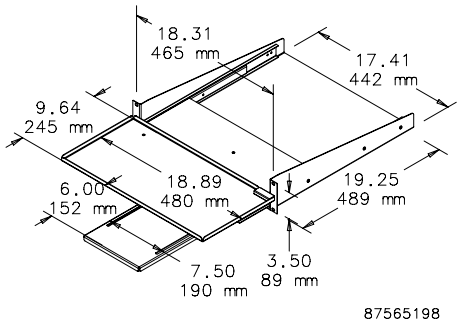

STEEL KEYBOARD/MONITOR SHELF

Designed to accommodate a monitor and keyboard in an fshpop njdbnnz!fohjofsfe!eftjho/!Ti fng!n pvout!up!gspou!åbohf!pg! open-frame rack. Can mount in a cabinet if rack angles are adjusted back for door clearance. Uses 3U of rack space. 19-in. and 23-in. sbdl!wfstjpot/!Tuffn!xju i!ufyuvsfe!cnbdl!Åojt i/!
Load rating: 200 lb. (91 kg)

BULLETIN: DACCY

Catalog Number	H x W x D in./mm	Fits Rack	Rack Units
ESH19KBM	5.25 x 17.38 x 15.10 133 x 441 x 384	19	3
ESH23KBM	5.25 x 21.38 x 15.10 133 x 543 x 384	23	3

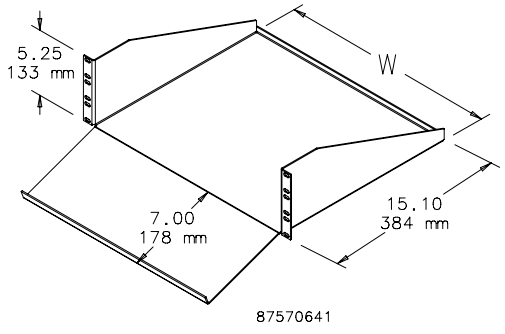

TOOL-LESS SHELF

An easy-to-install tool-less vented 19-in. shelf. Mounts onto rack angles that have EIA-spaced square holes (.375 in.). Shelf slides open and provides a variable-sized, continuous surface for equipment. Back of shelf has oval cutouts for power and data dbcnft/!Bddfttpsz!ipnf!qbuufsot!bu!cbdl!pg!t i fng!Åu!t n bm!boe!nbshf! D-rings to help manage cable. Made of steel with a 150 lb. (68 kg) static load rating. Available with RAL 9005 black or RAL 7035 gray qpnzftufs!qpxefs!dpbu!Åojt i/
Note: For square-hole rack angles only!

BULLETIN: DACCY

Catalog Number	Description	Finish	Minimum Depth mm/in.	Maximum Depth mm/in.	Rack Angle Type
D19FVT69B	Shelf, vented, 19 in. tool-less	Black	495 19.50	851 33.50	Square hole only
D19FVT69G	Shelf, vented, 19 in. tool-less	Gray	495 19.50	851 33.50	Square hole only
D19FVT912B	Shelf, vented, 19 in. tool-less	Black	792 31.20	1151 45.30	Square hole only
D19FVT912G	Shelf, vented, 19 in. tool-less	Gray	792 31.20	1151 45.30	Square hole only

Minimum and maximum depth measured from rack angle to rack angle.

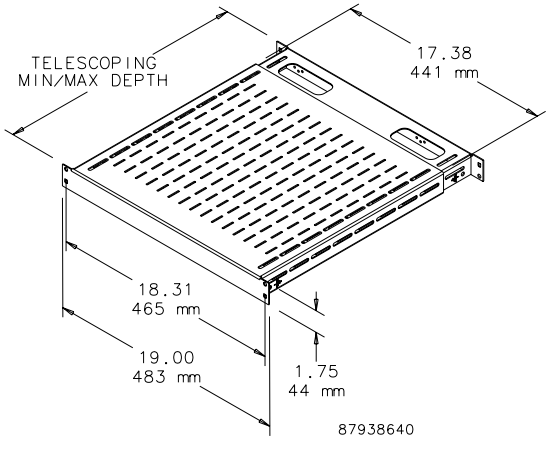

RACK-MOUNT ADJUSTABLE SHELF

Mounts to front surface of front and back rack angles. Shelf is made of painted 14 gauge steel and the adjustable support brackets are clear-plated 12 gauge steel. Bekvtubcnf!up!Åu!nvujqnf.efqui! enclosures or rack angle placement. Both solid and vented models available. Fits 19- or 23-in. rack spacing. Requires only 1U of rack space. Shelf has RAL 7035 light-gray textured or RAL 9005 black textured qpnzftufs!qpxefs!qbjou!Åojti/! Load rating: 150 lb. (68 kg)

BULLETIN: DACCY

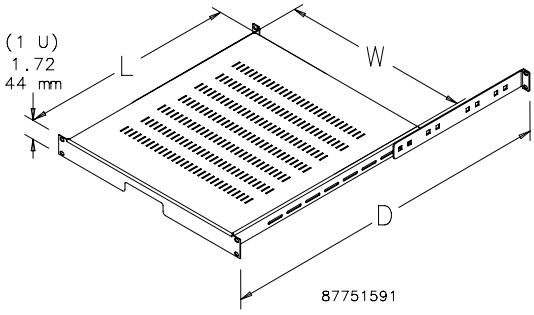

Catalog Number	Type	Size	Finish	L x W (in.)	L x W (mm)	Maximum Depth D (in.)	Maximum Depth D (mm)	Fits Enclosure Depth Up To (in.)	Fits Enclosure Depth Up To (mm)
P19SH68	Solid	19 in.	Gray	19.68 x 17.32	500 x 440	30.71	780	31.50	800
P19SH68B	Solid	19 in.	Black	19.68 x 17.32	500 x 440	30.71	780	31.50	800
P19VSH68B	Vented	19 in.	Black	19.68 x 17.32	500 x 440	30.71	780	31.50	800
P19SH810	Solid	19 in.	Gray	27.56 x 17.32	700 x 440	38.58	980	39.37	1000
P19SH810B	Solid	19 in.	Black	27.56 x 17.32	700 x 440	38.58	980	39.37	1000
P19VSH810B	Vented	19 in.	Black	27.56 x 17.32	700 x 440	38.58	980	39.37	1000
P23SH68B	Solid	23 in.	Black	19.68 x 21.32	500 x 542	30.71	780	31.50	800
P23VSH68B	Vented	23 in.	Black	19.68 x 21.32	500 x 542	30.71	780	31.50	800
P23SH810B	Solid	23 in.	Black	27.56 x 21.32	700 x 542	38.58	980	39.37	1000
P23VSH810B	Vented	23 in.	Black	27.56 x 21.32	700 x 542	38.58	980	39.37	1000

SINGLE-SIDED SHELF

Mounts to 19-in. rack angles to house voice/data networking frvjqn fou/!SBN!:116!cnbdl!Åojti/! Load rating: 75 lb. (34 kg)

BULLETIN: DACCY

Catalog Number	H x W x D (in.)	H x W x D (mm)	Style	Rack Units
ESH198	3.74 x 19.00 x 8.00	95 x 483 x 203	Solid	2
ESH1915	3.74 x 19.00 x 15.00	95 x 483 x 381	Solid	2
ESH1915V	3.74 x 19.00 x 15.00	95 x 483 x 381	Vented	2
ESH1917	3.74 x 19.00 x 17.00	95 x 483 x 432	Solid	2

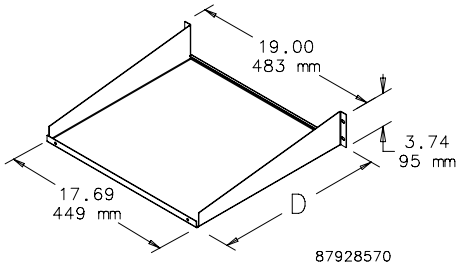

RACK-MOUNT SLIDING SHELF

Rack-Mount Sliding Shelf mounts to front surface of front and back sbdl!bohmftt/!Npefnt!Åu!2:.!ps!34.jo/!sbdl!tqbdjoh/!Bekvtu!up!Åu! multiple-depth enclosures and rack angle placements. Shelf can be used on 2-post rack or cabinet with front rack angles only by reversing support bracket. Optional cable manager arm available. 14 gauge steel with 12 gauge supports and RAL 9005 black or RAL 8146!hsbz!qpnzf tufs!qpxefs!qbjou!Åojt i/!Mpbe!sbujoh;!261!nc/!)79/1! kg) with four corner mounting; 75 lb. (34.0 kg) with two-post or front-rack-angle cabinet mounting.
Optional Cable Manager Arm is recommended to help control cable movement as shelf slides in and out.

BULLETIN: DACCY, P20

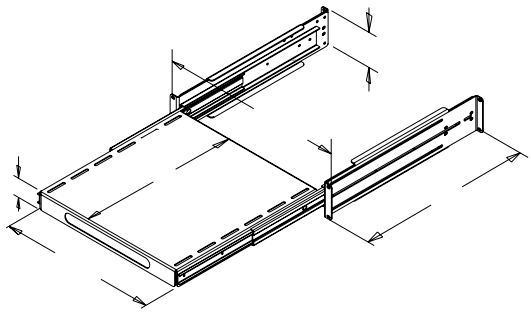

Catalog Number	D Max. (in.)	D Max. (mm)	L (in.)	L (mm)	J (in.)	J (mm)	Shelf Pullout (in.)	Shelf Pullout (mm)	Fits Rack	Rack Units	Color
P19SHP68B	37.40	950	16.72	425	16.20	412	17.00	432	19 in.	2	Black
P19SHP68	37.40	950	16.72	425	16.20	412	17.00	432	19 in.	2	Gray
P19SHP810B	41.30	1050	24.59	625	16.20	412	17.00	432	19 in.	2	Black
P19SHP810	41.30	1050	24.59	625	16.20	412	17.00	432	19 in.	2	Gray
P23SHP68B	37.40	950	16.72	425	20.20	513	17.00	432	23 in.	2	Black
P23SHP68	37.40	950	16.72	425	20.20	513	17.00	432	23 in.	2	Gray
P23SHP810B	41.30	1050	24.59	625	20.20	513	17.00	432	23 in.	2	Black
P23SHP810	41.30	1050	24.59	625	20.20	513	17.00	432	23 in.	2	Gray

CABLE MANAGER ARM FOR SLIDING EQUIPMENT SHELF

Cable Manager Arm mounts to back of sliding equipment shelf on right or left side. Controls cable movement as shelf slides in and out. 14 gauge steel with RAL 9005 black polyester powder paint Åojt i/

BULLETIN: DACCY

Catalog Number	Description	Use With
PHCB	Cable Manager Arm	Sliding Equipment Shelf

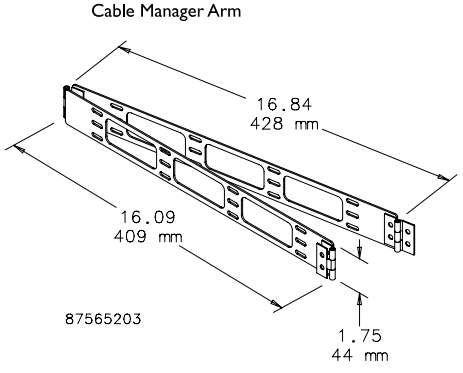

KEYBOARD COMPARTMENT FOR 19-IN. RACKS

Provides a convenient way to incorporate a keyboard with other 19-in. rack-mounted equipment. Uses 2 RU of space. Made of lightweight aluminum with csvt i fe!Åojt i/!Bddpn npebuft! keyboard up to 16.50-in. (419-mm) wide. Mounting hardware included.

BULLETIN: DACCY

Catalog Number	Fits rack width	Rack Units
A19KBC2B	19	2

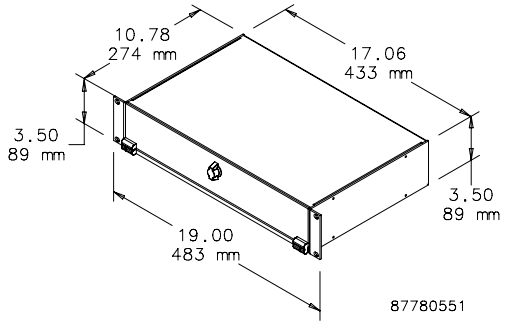

RACK-ANGLE MOUNTED DRAWER

Steel drawer for 19-in. rack-angle mounting. Mounts to the front surface of the rack angles. Integral steel box contains the drawer and protects surrounding internal equipment. Extends 13 in. (330 mm) on ball bearing slides. Front includes handle and key lock. Finish is RAL 7035 textured light-gray polyester powder paint. Mounting hardware is included.

BULLETIN: P20

Catalog Number	H (mm)	H (in.)	Fits Rack Width	Rack Units
P19DR1US	43	1.69	19 in.	1
P19DR2US	88	3.47	19 in.	2
P19DR3US	132	5.20	19 in.	3

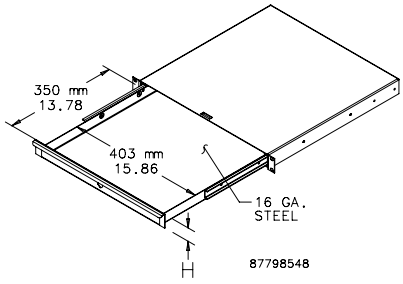

WRITING SURFACE FOR RACK-ANGLE-MOUNTED DRAWER

Steel cover mounts on top of the drawer and serves as a writing surface and drawer cover. Finish is RAL 7035 light-gray textured polyester powder paint. Drawer shown in illustration and photo must be ordered separately.

BULLETIN: P20

Catalog Number	Description	Fits
P19WS	Steel writing surface and cover	Drawer (order separately)

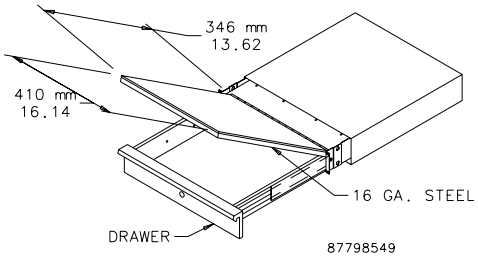

19-IN. FIXED SHELF

25!hbvhf!tuf fn!Åyfe!t i fng! i bt!nbshf!wfoujnbujpo!tnput!jo!t i fng! surface. Mounts between two pair of rack mounting angles that have accessory mounting legs. Shelves have RAL 7035 light-hsbz!qpnzf tufs!qpxefs!qbjou!Åojt i /!Qnbufe! n pvoujoh! i bsexbsf!jt! furnished.

BULLETIN: P20

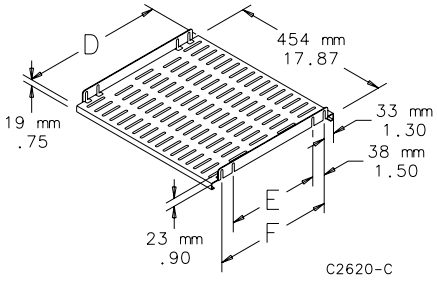

Catalog Number	D (in.)	D (mm)	E (in.)	E (mm)	F (in.)	F (mm)	Fits Rack Width
A19SH5	16.06	408	10.46	266	13.46	342	19 (in.)
A19SH6	20.00	508	14.40	366	17.40	442	19 (in.)
A19SH8	27.87	708	22.27	566	25.27	642	19 (in.)

CONCEPT KEYBOARD BOX

/I]FSEVH FS\ MW HIWMKRIH XS ¼X SR ER enclosure to provide a self-contained external Type 4 housing for a keyboard. The box attaches to the enclosure surface with 4 bolts. A large hole and rubber plug are provided for keyboard cord and TPYK 8LI LMRKIH GSZIV MW WYTTSVXIH [MXL ½I position. A left and a right mouse tray slides out from under the keyboard mounting surface. VELCRO® strips with pressure-sensitive adhesive are supplied to attach a keyboard. An internal mouse storage pracket is provided. The box and cover are 16 gauge steel [MXL %27- KVE] TSP]IWXIV TS[HIV TEMRX ¼RMV E WMRKPI UYEVXIV XYVR WPSXXIH PEWXIL¼X3TXMS VELCRO is a trademark of Velcro Industries B.V.

BULLETIN: A80

Catalog Number	AxBxC in./mm	Max. Keyboard Size W x D x H in./mm
CKBC24	10.00 x 23.30 x 4.79 254 x 592 x 122	20.20 x 8.00 x 2.34 513 x 203 x 59