RAIL150W/D10/WS2

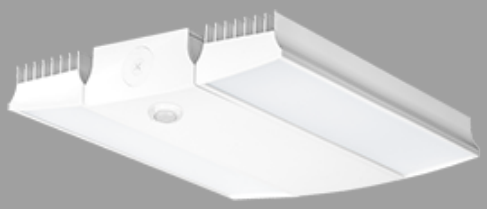

High efficiency. High output. High Bay RAIL.

Color: White

Weight: 17.1 lbs

Project:	**Type:**
Prepared By:	**Date:**

Driver Info

Type	Constant Current
120V	1.12A
208V	0.70A
240V	0.60A
277V	0.51A
Input Watts	133.9W

LED Info

Watts	150W
Color Temp	5000K (Cool)
Color Accuracy	84 CRI
L70 Lifespan	100,000 Hours
Lumens	17,907
Efficacy	133.7 lm/W

Technical Specifications

Compliance

UL Listed:

Suitable for damp locations

IESNA LM-79 & IESNA LM-80 Testing:

RAB LED luminaires and LED components have been tested by an independent laboratory in accordance with IESNA LM-79 and LM-80.

DLC Listed:

This product is listed by Design Lights Consortium (DLC) as an ultra-efficient premium product that qualifies for the highest tier of rebates from DLC Member Utilities.
DLC Product Code: PD5ZNY1S

Performance

Lifespan:

100,000-Hour LED lifespan based on IES LM-80 results and TM-21 calculations

LED Characteristics

LEDs:

Long-life, high-efficacy, surface-mount LEDs

Color Stability:

LED Color temperature is warrantied to shift no more than 200K in color temperature over a 5-year period

Color Uniformity:

RAB's range of Correlated Color Temperature follows the guidelines of the American National Standard for Specifications for the Chromaticity of Solid State Lighting (SSL) Products, ANSI C78.377-2017.

Construction

Ambient Temperature:

Suitable for use 12 hours a day, 6 days a week in 60°C (140°F). Suitable for 24/7 use in up to 55°C (131°F).

Housing:

Extruded aluminum

Lens:

High-transmittance polystyrene

Reflector:

Specular, high-reflectance aluminum with 95% reflectivity

Mounting:

V hooks (chain by others)

Other

Replacement:

Replaces 175-320W MH

Warranty:

RAB warrants that our LED products will be free from defects in materials and workmanship for a period of five (5) years from the date of delivery to the end user, including coverage of light output, color stability, driver performance and fixture finish. RAB's warranty is subject to all terms and conditions found at rablighting.com/warranty.

Copyright © 2022 RAB Lighting All Rights Reserved Note: Specifications are subject to change at any time without notice

Technical Specifications (continued)

Other

Trade Agreements Act Compliant:

This product is a product of Cambodia and a "designated country" end product that complies with the Trade Agreements Act

Buy American Act Compliance:

RAB values USA manufacturing! Upon request, RAB may be able to manufacture this product to be compliant with the Buy American Act (BAA). Please contact customer service to request a quote for the product to be made BAA compliant.

Sensor Specifications

Operating Voltage:

120-277V

Power Consumption:

1W

0-10V Sinking Current:

50mA

Adjustable High and Low Modes:

High: 0-10V; Low: off, 0-9.8V

Adjustable Time Delay:

Amount of time in high mode with no motion before switching to low mode: 5 min., 1 -30 min.

Adjustable Cut Off Delay:

Time in which the fixture will remain on low mode with no motion before turning off and waiting for new motion to turn on: None, 1 -60 min., 1 -5 hrs.

Adjustable Sensitivy:

None, low, medium, maximum

Adjustable Setpoint:

None, 1 to 250 fc, auto

Adjustable Ramp Up and Fade Down Times:

1 to 60 sec

Operating Temperature:

-40°F to 167°F (-40°C to +75°C)

Operating Humidity:

20% to 90% noncondensing

Relay Life Rating:

200,000 cycles (120/277VAC), 50,000 cycles (230VAC)

IP Rating:

Ingress protection rating of IP66 for dust and water

UL Listed:

Suitable for Wet Locations as factory installed

Handheld Wireless Configuration Tool:

Adjust settings using handheld wireless configuration tool. Only available with 0-10V dimming driver options. Handheld wireless configuration tool available here.

Multi Level Motion Sensor:

/WS2 sensor options use state-of-the-art surface mount technology (SMT), just like cellular phones and beepers. SMT gives you more reliability, greater RF immunity. This compact sensor that can fit neatly where others cannot. This sensor technology automatically affects the state of operation for lighting systems or individual luminaries based upon detecting the presence or absence of movement for both people as they exit/enter, or for the motion of moving vehicles within the sensors viewing area. The wide 180° viewing angle can detect movement along the entire side of a building with only one compact sensor. The hard lens is molded as part of the case, vandalproof, rainproof, bugproof and absolutely sealed. Sensor functions best when movement is across its detection pattern, not towards the sensor.

Electrical

Driver:

Constant Current, Class 2, 120-277V, 50/60Hz, 120V: 1.12A, 208V: 0.70A, 240V: 0.60A, 277V 0.51A

THD:

7.12% at 120V, 10.05% at 277V

Power Factor:

99.8% at 120V, 94.5% at 277V

Copyright © 2022 RAB Lighting All Rights Reserved Note: Specifications are subject to change at any time without notice

RAIL150W/D10/WS2

Dimensions

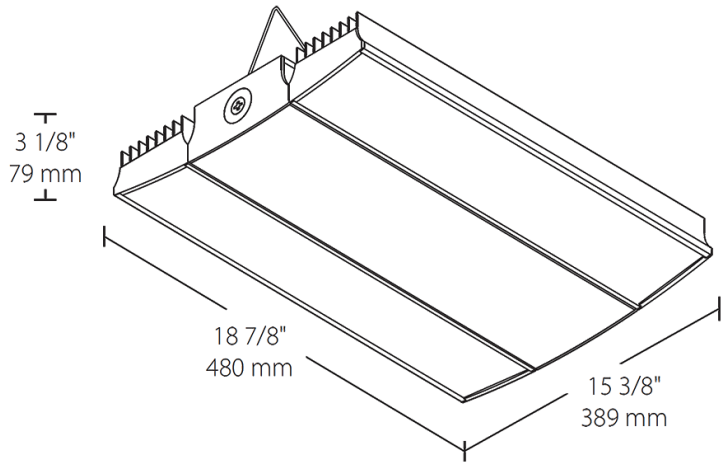

Features

- Ideal for large spaces
- 100,000-hour lifespan - virtually maintenance free operation
- 0-10V driver for variable dimming down to 10%
- Low-glare design with semi-diffuse lens

Ordering Matrix

Family	Wattage	Color Temp	Finish	Driver Options	Control Options	Other Options
RAIL	150		W	/D10	/WS2	
	95 = 95W **150 =** 150W **185 =** 185W **225 =** 225W **400 =** 400W	**Blank =** 5000K Cool **N =** 4000K Neutral **YN =** 3500K Warm Neutral	**W =** White	**/D10 =** 120-277V, 0-10V Dim **/480/D10 =** 480V, 0-10V Dim	**/LC/E2 =** Lightcloud® Controller w/ Battery Pack [2] **Blank =** No Option **/BL =** Bi-Level Control **/WS2 =** Multi-Level Motion Sensor 20 ft. [1] **/WS4 =** Multi-Level Motion Sensor 40 ft. [1] **/LOS =** LOSBAY 800 Sensor **/LC =** Lightcloud® Controller **/LCS =** Lightcloud® Sensor **/E2 =** Battery Pack	**Blank =** Standard **USA =** BAA Compliant

[1] *WS2 with 20' lens only available for 95 and 150W models; WS4 with 40' lens only available for 185 and 225W models. Both sensors only available with /D10 dimming drivers, but not with 480V driver.*

[2] *Not available in RAIL 400W*

Copyright © 2022 RAB Lighting All Rights Reserved Note: Specifications are subject to change at any time without notice