R9B



Fits covers and boxes to provide weatherproof seal. Precision die cast with clean threads. Plugs accept both Phillips and slotted screwdrivers for easy installation. Choose the diameter and color to fit your application.

Color: Black

Weight: 0.0 lbs

Project:	Type:
Prepared By:	Date:

Technical Specifications

Compliance

UL Listed:
Suitable for wet locations

Construction

Material:
Precision die cast or stamped aluminum. Spring loaded covers. .

Screws:
6-32 Nickel Plated Brass

Diameter:
1/2"

Other

Buy American Act Compliance:
RAB values USA manufacturing! Upon request, RAB may be able to manufacture this product to be compliant with the Buy American Act (BAA). Please contact customer service to request a quote for the product to be made BAA compliant.

Copyright © 2024 RAB Lighting All Rights Reserved Note: Specifications are subject to change at any time without notice

Dimensions

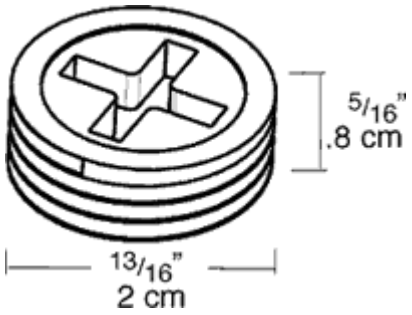

Features

- Sturdy, clear cover for easy visibility
- Thick weather seal gaskets
- Mounting hardware supplied
- Close-up plugs allow Phillips or slotted screwdrivers for easy installation
- RAB's distinctive see-thru weatherproof packaging has all the information you need
- Clear PVC plastic turtle cover with lockable latch
- Smooth edged electrical cord slots

Copyright © 2024 RAB Lighting All Rights Reserved Note: Specifications are subject to change at any time without notice