ACCESSORIES

REFER TO ACCESSORY INDEX TO MATCH ACCESSORY WITH PRODUCT.
ILLUSTRATIONS SHOWN ARE TYPICAL REPRESENTATIONS.

REMOTE BALLASTED OPTICAL MOUNTING BOX

- **RBOMB-FDG** (UL LISTED) (c UL LISTED) for load make/break
  For mounting sliding disconnect opticals — reference page I-3 (can be obtained as separate accessory or as part of Single Remote Power Connector)
- **RBOMB-FDGQ**
  Same as **RBOMB-FDG** except for quartz socket (UL LISTED) (c UL LISTED) for load make/break

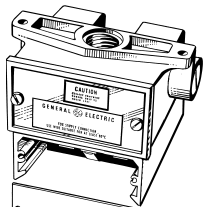

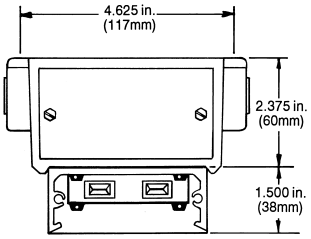

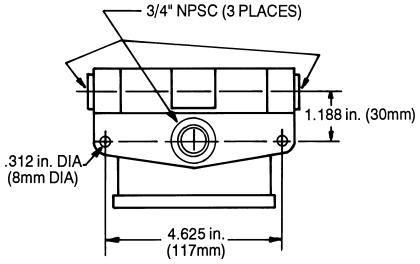

- **RBOMBA-UGUM**
  For mounting Direct Mount Opticals — reference page I-3. Set in Socket Position "A". No connecting cable included.
- **RBOMBA-UGUMQ**
  Same as **RBOMBA-UGUM** except with quartz socket
- **RBOMBF-UGUM**
  Set in Socket Position "F".
  No connecting cable included.
- **RBOMBF-UGUMQ**
  Same as **RBOMBF-UGUM** except with quartz socket

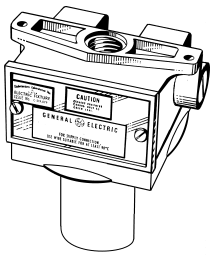

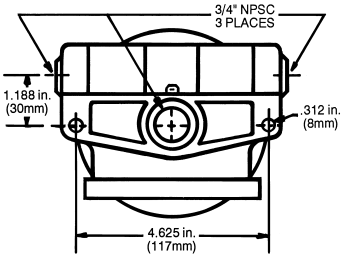

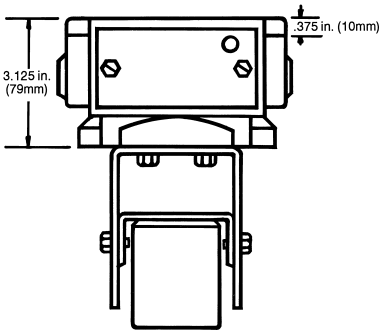

NOTE: For field adjustment of socket position for a specific lamp type and wattage, refer to product's Ballast and Photometric Selection Table.

- **RBOMB-GHBB**
  For mounting Bracket Mount Opticals — reference page I-3.
  No connecting cable included.
- **RBOMB-GHBBQ**
  Same as **RBOMB-GHBB** except with quartz socket

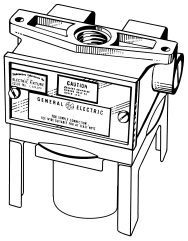

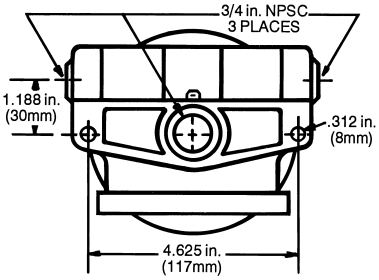

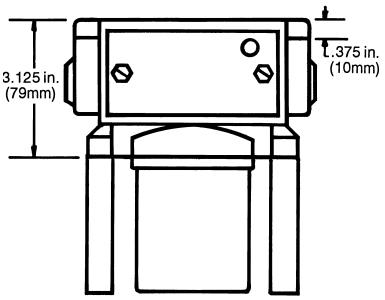

(UL) Registered Trademark of Underwriters Laboratories
(c UL) Registered Trademark of Underwriters Laboratories of Canada
® Registered Trademark of General Electric Company
™ Trademark of General Electric Company
Data subject to change without notice