RACK-MOUNT SLIDING SHELF

The Rack-Mount Sliding Shelf allows easy access to shelf-mounted devices. Shelf is 16-gauge steel with 12-gauge steel supports. 8LI IRXMVI EWWIQFP] MW ¼RMWLIH [MXL 6%0 XI\XYVIH PMKLX-KVE] polyester powder paint. The shelf mounts to the front surface of front and back rack angles.
;LIR QSYRXIH HMVIGXP] XS E JVEQI PSEH VEXMRK MW PF OK [MXL JSYV VEGO ERKPI QSYRXMRKW ERH PF OK [MXL JVSRX VEGO ERKPI mounting.

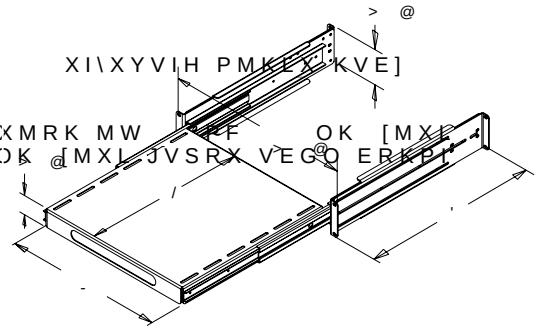

Rack accessories that are shorter than the enclosure depth can be mounted to rack angles or frame accessory brackets attached to grid straps. Order these items separately.

Note: only mount shelves in applications with four points of attachment.

BULLETIN: P20

Catalog Number	D Max in./mm	L in./mm	J in./mm	Shelf Pullout in./mm	Fits Rack Width	Rack Units
P19SHP68	37.40 950	16.72 425	16.20 412	17.00 432	19 in.	2
P19SHP810	41.30 1050	24.59 625	16.20 412	17.00 432	23 in.	2

TOOL-LESS SHELF

Catalog Number	Description	Finish	Minimum Depth mm/in.	Maximum Depth mm/in.	Rack Angle Type
D19FVT69G	Shelf, vented, 19 in. tool-less	Gray	495 19.50	851 33.50	Square hole only
D19FVT912G	Shelf, vented, 19 in. tool-less	Gray	792 31.20	1151 45.30	Square hole only

Minimum and maximum depth measured from rack angle to rack angle.

An easy-to-install tool-less vented 19-in. shelf. Mounts onto VEGO ERKPIW XLEX LEZI)-% WTEGIH WUYEVI LSPIW MR 7LIPJ slides open and provides a variable-sized, continuous surface for equipment. Back of shelf has oval cutouts for power and data GEFPIW %GGIWWSV] LSPI TEXXIVRW EX FEGO SJ WLIPJ ¼X WQEPPIVH PEVKI (VMRKW XS LIPT QEREKI GEFPI 1EHI SJ WXIIP [MXL E PF OK WXEXMG PSEH VEXMRK %ZEMPEFPI [MXL 6%0 FPEGO SV 6%0 KVE] TSP]IWXIV TS[HIV GSEX ¼RMWL
Note: For square-hole rack angles only!

BULLETIN: DACCY

