TRANSPORTATION BASE JOINING KIT, SIDE TO SIDE

APPLICATION

The PROLINE G2 Transportation Base Joining Kit, Side-to-Side interconnects transportation bases while maintaining the NEMA Type 12 rating.

FEATURES

- Maintains NEMA 12 rating between Fully-Sealed Plinth bases
- Allows for sealed cable routing between joined cabinets

SPECIFICATIONS

- Gasket and installation hardware included
- Furnished grommet applied to edge of wire feed

BULLETIN: P40

Catalog Number	Description
P2AJT	Transportation Base Joining Kit, Side-to-Side

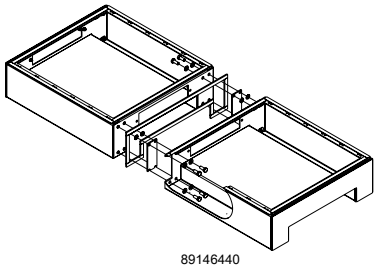

89146440

TRANSFORMER RAILS

APPLICATION

Transformer Rails are used to mount heavy components and transformers in the bottom of an enclosure.

FEATURES

- Installed side-to-side in the frame for component mounting
- Includes four M10 clamping nuts and bolts to attach equipment to rails

SPECIFICATIONS

- Rails slotted to fit the integral mounting holes in the frame
- All mounting hardware included

FINISH

Plated

BULLETIN: P20

Catalog Number	Length (mm)	Length (in.)	Fits Frame Width (mm)
PTR6	534	21.02	600
PTR8	734	28.90	800
PTR12	1134	44.65	1200

MOBILE BASE

APPLICATION

Mobile bases include casters and extend beyond the front and rear of 600- and 800-mm wide modular enclosures to provide enhanced stability.

FEATURES

- The front and rear top surfaces of the base are trimmed with 3-mm thick black rubber mats
- Four non-locking casters provide a maximum load-bearing capacity of 1000 lb. (453.6 kg)

SPECIFICATIONS

- Available as standard product for 600- and 800-mm wide frames
- The base fastens to the underside of the frame and provides integral mounting of furnished casters
- Casters and mounting hardware are furnished
- Exercise care when using casters to move the enclosure
- Avoid tipping and damage to the enclosure and its contents by slowly moving the enclosure on its casters across smooth, flat flooring
- Avoid large cracks, floor displacement, seams, gravel and any other obstruction
- Never use casters while transporting an enclosure by truck on roadways
- Contact Hoffman for more information

FINISH

- Polyester powder paint; RAL 9005 textured black standard
- Custom colors available

ACCESSORIES

Mobile Base Leveling Kit

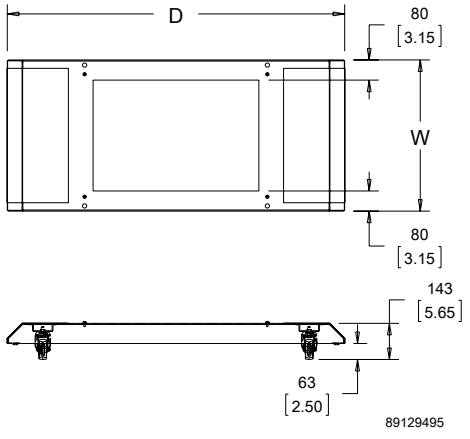

BULLETIN: P40

Standard Product

Catalog Number	W (mm)	W (in.)	D (mm)	D (in.)	Fits Frame WxD (mm
P2BM64	600	23.6	939	37.0	600 x 400
P2BM65	600	23.6	1039	40.9	600 x 500
P2BM66	600	23.6	1139	44.8	600 x 600
P2BM68	600	23.6	1339	52.7	600 x 800
P2BM84	800	31.5	939	37.0	800 x 400
P2BM85	800	31.5	1039	40.9	800 x 500
P2BM86	800	31.5	1139	44.8	800 x 600
P2BM88	800	31.5	1339	52.7	800 x 800
P2BM810	800	31.5	1539	60.6	800 x 1000

Model	Component	Type	Width	Depth		Catalog Number
P2	B	M	8	6	=	P2BM86
PROLINE G2	Base	0 = solid base 0mm 1 = fully sealed plinth P1 = plinth base 100mm P2 = plinth base 200mm GP = gland plate T = transportation base M = mobile base	mm 8 = 800 6 = 600	mm 10 = 1000 8 = 800 6 = 600 5 = 500 4 = 400		

NOTE: Not every combination is available as a standard product.

LEVELER KITS

The Mobile Base Leveling Kit allows for height adjustments at the corners of the Mobile Base to account for uneven floors. Levelers are plated for indoor use, and are rated to 3000 lbs. (1361 kg). Note: the non-locking casters of the Mobile Base have a load bearing capacity of 1000 lbs. (453.6 kg): exercise caution if disengaging the levelers.

BULLETIN: P40

Catalog Number	Description
P2ALK	Post-type Leveler Kit
P2ALKMB	Mobile Base Leveling Kit

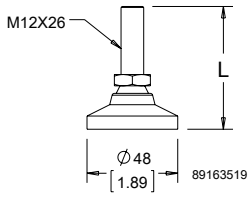

The Post-type Leveler Kit allows for height adjustment at the enclosure corners to account for uneven floors. Levelers thread into the frame corners, and can be used with a bottom-mounted Gland Plate or a 0-mm Solid Base; they may also be affixed to the corner blocks of the standard Plinth Base. Levelers are plated for indoor use, and are rated to 3000lbs (1361kg).

FRAME FEET

Four die-cast feet for use on the bottom of PROLINE frames that raise the frame 9 mm.

BULLETIN: P20

Catalog Number	Description
PFFM12	Frame Feet

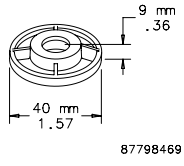

CASTER KIT

with no caster swivel interference. Casters are rated to 3000 lbs. (1361 kg).

Exercise caution when moving enclosures with casters: avoid adverse floor conditions such as cracks, seams, displacement, etc. Never use casters while transporting an enclosure by truck on roadways.

BULLETIN: P40

Catalog Number	Description
P2ACK	Plate Caster Kit

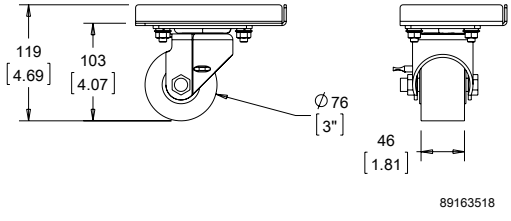

The Plate Caster Kit consists of four polyamide casters (two locking and two non-locking) secured to formed-steel plates painted RAL 7035. The Plate Caster hardware secures the caster at the frame corners, and can be used with a bottom-mounted Gland Plate or a 0-mm Solid Base; however, they do not work with Plinth Bases. Plate Casters can also be used on joined PROLINE G2 enclosures,

STAINLESS STEEL LEGS

NOTE: These legs will not fit on the PROLINE G2 Fully-Sealed Plinth Base.

BULLETIN: P20S

Catalog Number	Description
PLEGSS	(4) Stainless Steel Legs

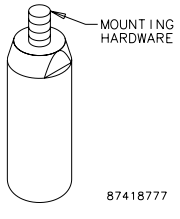

Legs mount to the bottom of a solid base to elevate the enclosure 4 in. (100 mm) from the floor. The legs are made of Type 304 stainless steel and are appropriate for hose-down applications. Mounting hardware is included.