Catalog Number
Notes
Type

Contractor Select™

TWR LED

LED Wall Pack
Adjustable+Switchable+Photocell

The Lithonia Lighting® TWR wall packs combine the power of the latest generation of LEDs in a popular and classic day-form to provide exceptional energy savings. These wall packs give ultimate versatility to both the distributor and contractor by offering 18 configurations in one product with their standard Adjustable Lumen Output (ALO), Switchable color temperature (SWW2), and adjustable photocell (PE) features.

Adjustable Lumen Output ALO | Switchable CCT SWW2 | Dusk-to-Dawn Operation PE

FEATURES:

- Two sizes deliver from 2,300 lumens up to 16,100 lumens, replacing 70W to 400W HID luminaires
- Energy savings of up to 86% when replacing HID wall packs with less than two year paybacks
- Three power levels of adjustable lumen output. Switchable CCT(3000K/4000K/5000K) offers warm, cool and daylight in a single fixture
- Standard photocell can be turned on or off
- IP65 rated, Die-cast aluminum housing and borosilicate glass lens
- up to 155 LPW

Catalog Number	Adjustable Lumen Output ALO			Switchable CCT SWW2	Dusk-to-Dawn Operation PE	Input Voltage	CRI
TWR1 LED ALO SWW2 UVOLT PE DDBTXD	2,300 Lumens	5,300 Lumens	8,500 Lumens*	Switchable 3000K, 4000K*, 5000K	Included Standard, Selectable On*/Off	120-347V	80CRI
TWR2 LED ALO SWW2 UVOLT PE DDBTXD	8,200 Lumens	12,100 Lumens	16,100 Lumens*				

* - Default out of the box settings

TWR LED Stock Configuations

Catalog Number	UPC	Ci Code	Number of fixtures per pallet	Traditional Replacement
TWR1 LED ALO SWW2 UVOLT PE DDBTXD	00196183389947	*280GWW	45	70W - 250W HID
TWR2 LED ALO SWW2 UVOLT PE DDBTXD	00196183390028	*280GX5	32	250W - 400W HID

Specifications

INTENDED USE:

The TWR LED combines traditional wall pack design with latest generation LEDs to provide an energy-efficient, low maintenance LED wall pack suitable for replacing up to 400W Metal Halide fixtures. The traditional shape helps maintain building aesthetics when replacing only a portion of your building's wall packs. TWR LED is ideal for outdoor applications such as carports, loading areas, self storage and parking areas.

CONSTRUCTION:

Rugged cast-aluminum housing with bronze polyester powder paint for lasting durability. Door is hinged on the side and can be detached for easy installation and service. Castings are sealed with a one-piece gasket to inhibit the entrance of external contaminants. Rated for outdoor installations, -40°C minimum ambient.

ELECTRICAL:

Light engine consists of long-life, high-efficacy LEDs mounted on an internal aluminum heat sink to maximize heat dissipation and promote long life. LEDs maintain 90% of light output at 50,000 hours of service. (LED lifespan based on IESNA LM-80-08 results and calculated per IESNA TM-21-11 methodology. The UVOLT driver operates on any line voltage from 120-347V (50/60Hz). All luminaires have 6kV surge protection. There are no user serviceable parts. The fixture is supplied with a 0-10V driver and is dimmable by 0-10V controls.

INSTALLATION

Designed for wall mounting above four feet from ground. Housing is configured for mounting directly over a standard 4" outlet box (by others) or for surface wiring via any of four convenient 1/2" threaded conduit entry hubs.

LISTINGS:

UL Listed to U.S. and Canadian safety standards for wet locations. Tested in accordance with IESNA LM-79 and LM-80 standards.

DesignLights Consortium® (DLC) Premium qualified product and DLC qualified product. Not all versions of this product may be DLC Premium qualified or DLC qualified. Please check the DLC Qualified Products List at www.designlights.org/QPL to confirm which versions are qualified.

WARRANTY:

5-year limited warranty. This is the only warranty provided and no other statements in this specification sheet create any warranty of any kind. All other express and implied warranties are disclaimed. Complete warranty terms located at: www.acuitybrands.com/support/warranty/terms-and-conditions

Note: Actual performance may differ as a result of end-user environment and application. All values are design or typical values, measured under laboratory conditions at 25 °C. Specifications subject to change without notice.

Dimensions

TWR1:

Width: 13.2" / 33.5cm
Height: 9.4" / 23.9cm
Depth: 7.2" / 18.4cm
Weight: 7.5lbs (3.4kg)

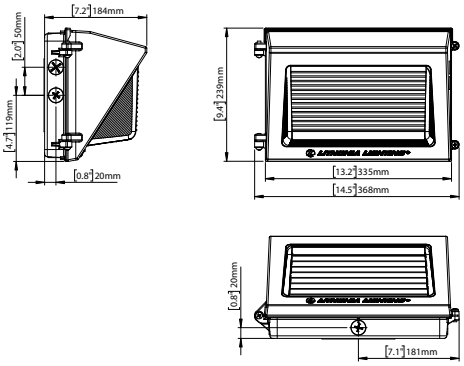

TWR2:

Width: 17.1" / 43.5cm
Height: 9.2" / 23.4cm
Depth: 7.9" / 20.1cm
Weight: 12.1lbs (5.5kg)

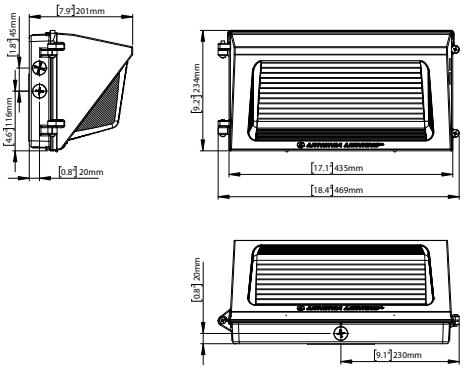

All dimensions are inches (centimeters) unless otherwise indicated.

© 2023 Acuity Brands Lighting, Inc. All rights reserved. Rev. 01/24/23

LUMEN OUTPUT:

Lumen values are from photometric tests performed in accordance with IESNA LM-79-08. Data is considered to be representative of configurations shown within the tolerances described within LM-79.

Size	Lumen Output	Input Wattage	CCT/80CRI	Delivered Lumens	Lumens Per Watt @ 4000K, 80CRI
TWR1	2,300	16W	3000K	2,295	145
			4000K	2,292	
			5000K	2,359	
	5,300	36W	3000K	5,277	151
			4000K	5,347	
			5000K	5,390	
	8,500	59W	3000K	8,400	148
			4000K	8,581	
			5000K	8,523	

Size	Lumen Output	Input Wattage	CCT/80CRI	Delivered Lumens	Lumens Per Watt @ 4000K, 80CRI
TWR2	8,200	55W	3000K	8,132	155
			4000K	8,427	
			5000K	8,290	
	12,100	82W	3000K	11,875	152
			4000K	12,449	
			5000K	12,037	
	16,100	112W	3000K	15,794	147
			4000K	16,270	
			5000K	16,262	

© 2023 Acuity Brands Lighting, Inc. All rights reserved. Rev. 01/24/23