inSIGHT

Circuit-Lock Disconnect

with LED Indicators

Features

- Six highly visitble integral phase indentification LEDs
- Secondary confirmation of isolation of power
- Certified by NSF
- Highly visible red handle meets OSHA LO/TO capabilities
- 15 degree sloped top support hygenic design



Ordering Information

Description	UPC Number	Catalog number
Sloped Disconnect, 100AUN-F, 4X,SS, LED	783585640372	**HBLDS10SSRP**

Listings

cULus Listed
NSF

Specifications

Environmental rating	UL Witnessed IP69K, 4X and 12
Enclosure: Base and Top	304 Stainless Steel
Handle	PBT
Conduit Hub	1 1/4" Zinc
Enclosure Gasket	Neoprene
Frame	Galvanized Steel
Enclosure Screws	Stainless Steel 300 Series
Shaft (Unfused)	PBT
Shaft Seal	Molded Neopren
LED Lense	PC

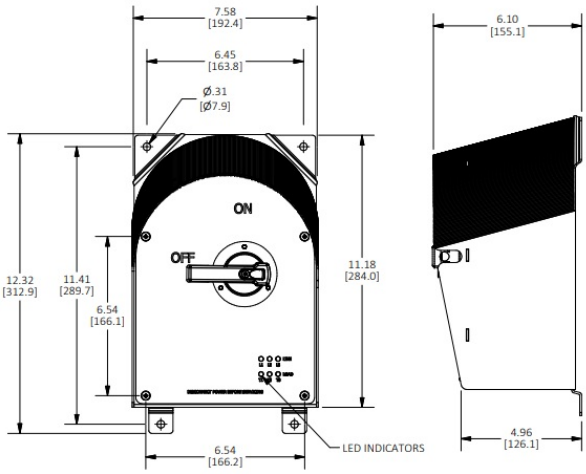

Performance

Electrical

Current Interrupting	Certified for current interrupting at full rated current and voltage
Dielectric Voltage	Withstands 3000V AC minimum
Max. Working Voltage	600V AC RMS
Short Circuit Current Ratings (SCCR): (Motor Disconnect)	(SCCR): (Motor Disconnect) Suitable for use on a circuit capable of delivering not more than 65kA RMS symmetrical, 600V AC max. when protected by Class J fuses rated 30A max.

Mechanical

Impact Resistance	In accordance with UL 746C
Mounting	External fully adjustable feet
Terminal Identification	In accordance with UL, CSA and international conventions

Environmental

Flammability	UL94-5VA and V0 Classification
Moisture Resistance	Indoor and Outdoor – Type 4X (Wash down, Corrosion resistant); Indoor – Type 12 (Dust-tight, Falling Dirt, Noncorrosive Liquids).
Operating Temperature	Max. Continous: 75°C; Min. Continuous: -40°C without impact

Complementary Products

"Break After Main" 1NO & 1 NC Aux Contact	HBLAC1
"Break Before Main" 1NO Aux Contact	HBLAC2
1 1/4" Stainless Steel Conduit Hub	HUB125SS

Online Resources

Customer Use Drawing
eCatalog
Installation Instructions

Dimensions in Inches (mm)

Hubbell Wiring Device-Kellems • Hubbell Incorporated (Delaware) • 40 Waterview Drive • Shelton, CT 06484
Phone (800) 288-6000 • Fax (800) 255-1031 • Specifications subject to change without notice.

Wiring Device-Kellems