BALDOR
A MEMBER OF THE ABB GROUP

BALDOR • RELIANCE

Product Information Packet

M7002A

.33HP,1725RPM,3PH,60HZ,56,X3413M,XPFC,F1

Copyright © All product information within this document is subject to Baldor Electric Company copyright © protection, unless otherwise noted.

Part Detail							
Revision:	AC	**Status:**	PRD/A	**Change #:**		**Proprietary:**	No
Type:	AC	**Prod. Type:**	3413M	**Elec. Spec:**	34WG5723	**CD Diagram:**	CD0007
Enclosure:	XPFC	**Mfg Plant:**		**Mech. Spec:**	34-5323	**Layout:**	34LY5323
Frame:	56	**Mounting:**	F1	**Poles:**	04	**Created Date:**	
Base:	RG	**Rotation:**	R	**Insulation:**	B	**Eff. Date:**	05-26-2016
Leads:	12#18					**Replaced By:**	
Literature:		**Elec. Diagram:**					

BALDOR A MEMBER OF THE ABB GROUP

Nameplate NP0016XPSL

NO.		**CC**					
SER.							
SPEC.	34-5323-5723						
CAT.NO.	M7002A						
HP	.33	**T. CODE**	T3C				
VOLTS	208-230/460						
AMPS	1.8-1.6/.8						
RPM	1725						
HZ	60	**PH**	3	**CL**	B		
SER.F.	1.00	**DES**	B	**CODE**	L		
RATING	40C AMB-CONT						
FRAME	56	**NEMA-NOM-EFF**	67				
USABLE AT 208V	1.8	**PF**	57				
BLANK							

BALDOR
A MEMBER OF THE ABB GROUP

AC Induction Motor Performance Data

Record # 6820 - Typical performance - not guaranteed values

Winding: 34WG5723-R001	**Type:** 3413M	**Enclosure:** XPFC

Nameplate Data				460 V, 60 Hz: High Voltage Connection	
Rated Output (HP)	.33			Full Load Torque	1 LB-FT
Volts	208-230/460			Start Configuration	direct on line
Full Load Amps	1.8-1.6/.8			Breakdown Torque	4.7 LB-FT
R.P.M.	1725			Pull-up Torque	3.35 LB-FT
Hz	60	Phase	3	Locked-rotor Torque	3.75 LB-FT
NEMA Design Code	B	KVA Code	L	Starting Current	4.4 A
Service Factor (S.F.)	1			No-load Current	0.7 A
NEMA Nom. Eff.	67	Power Factor	57	Line-line Res. @ 25ºC	49.1 Ω
Rating - Duty	40C AMB-CONT			Temp. Rise @ Rated Load	47°C

Load Characteristics 460 V, 60 Hz, 0.33 HP

% of Rated Load	25	50	75	100	125	150
Power Factor	28	40	50	57	64	69
Efficiency	44	59	65	68	68	67
Speed	1788	1770	1760	1745	1730	1710
Line amperes	0.7	0.73	0.77	0.8	0.85	1

BALDOR A MEMBER OF THE ABB GROUP

Performance Graph at 460V, 60Hz, 0.33HP Typical performance - Not guaranteed values

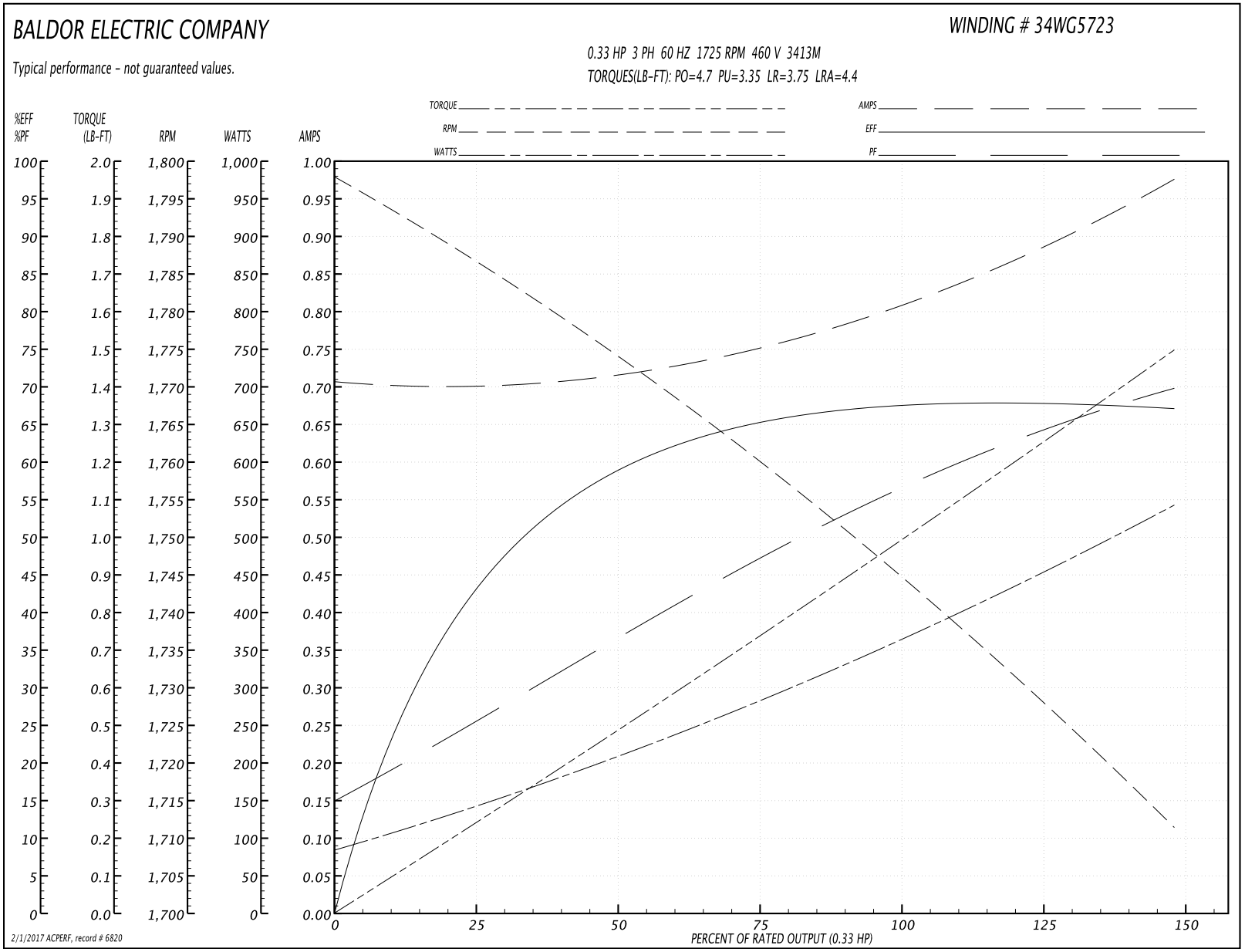

BALDOR
A MEMBER OF THE ABB GROUP

34LY5323

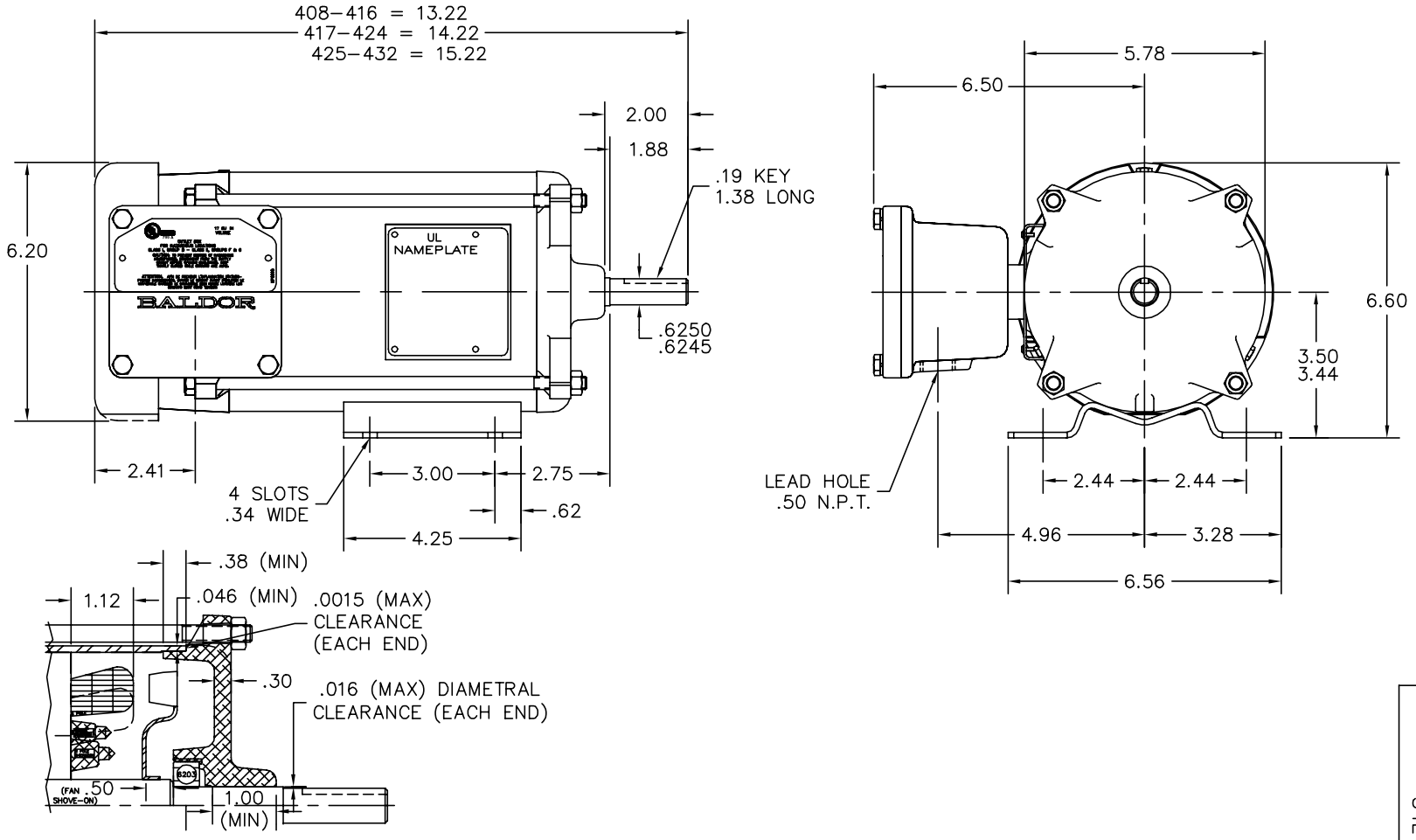

CUSTOMER IS RESPONSIBLE FOR DETERMINING THAT BALDOR'S PRODUCT WILL PERFORM SUITABLY IN THE INTENDED APPLICATION.

REV. DESC: UPDATE DWG		
REV. LTR: K	VERSION: 07	TDR: 000000918748
FILE: \AAA\00026\312	REVISED: 03:56:50 04/06/2015	BY: ENJERWO
MTL: –		

BALDOR

HORZ X34M 56 XPFC CL–I GP–D, CL–II GP–F&G, .50 NPT LEAD

SH 1 of 1

34LY5323

BALDOR
A MEMBER OF THE ABB GROUP

CD0007

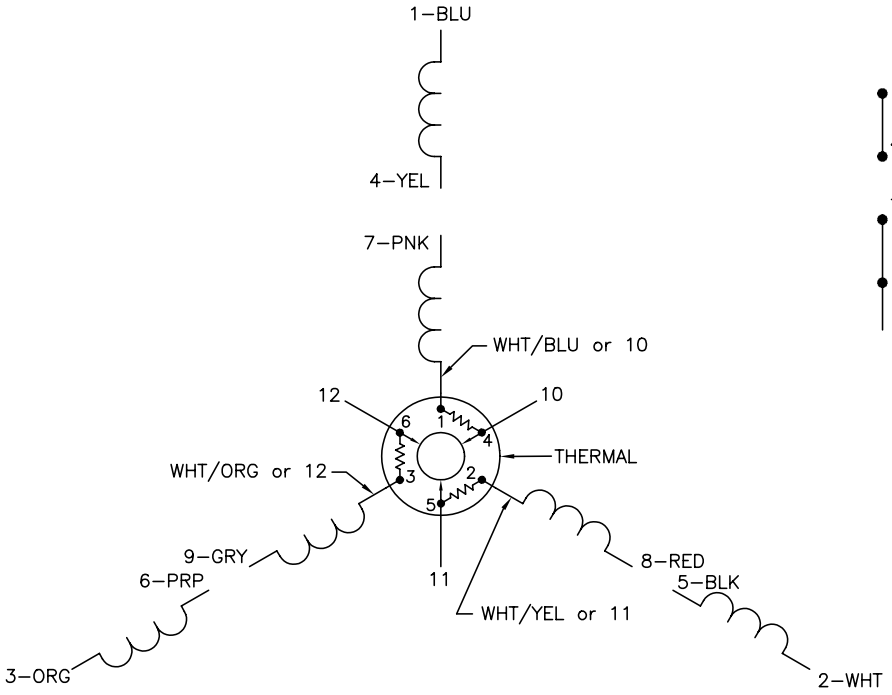

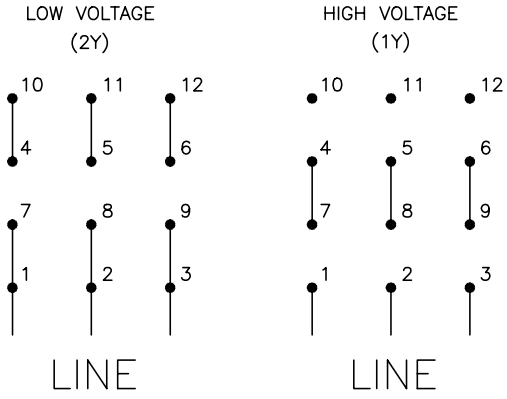

NOTES:

1. INTERCHANGE ANY TWO LINE LEADS TO REVERSE ROTATION.
2. ACTUAL NUMBER OF INTERNAL PARALLEL CIRCUITS MAY VARY.
3. LEAD COLORS ARE OPTIONAL. LEADS MUST ALWAYS BE NUMBERED AS SHOWN.

REV. DESC: ADDED "CK" PLANT CODE			BALDOR ELECTRIC Co.
REV. LTR: E	BY: EAH	REVISED: 05/06/99 17:1	TDR: 0181040
CD0007		FILE: AAA00008370	MDL: –
		MTL: –	3PH, DV, THERMAL, 12 LEADS

CD0007

BALDOR A MEMBER OF THE ABB GROUP