Product specifications

Eaton B112ZN

Catalog Number: B112ZN

Eaton B-Line series adjustable fitting, 3.74" H x 6.62" L x 1.62" W, Steel, Electro-plated, 1/4" Gauge

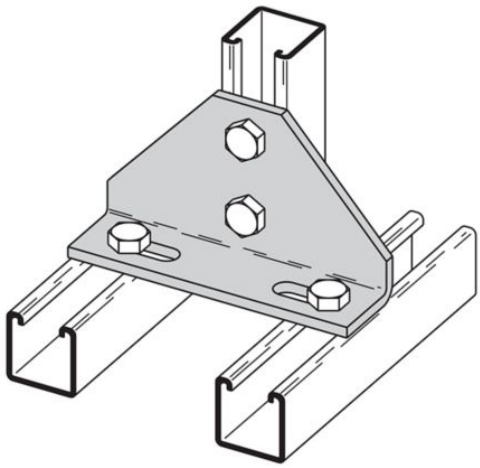

Photo is representative

General specifications

Product Name	**Catalog Number**
Eaton B-Line series adjustable fitting	B112ZN
UPC	**Product Length/Depth**
781011501631	6.62 in
Product Height	**Product Width**
3.74 in	1.62 in
Product Weight	**Certifications**
1.8 lb	Not Applicable

Powering Business Worldwide

Model

Special features

Slot size 1-1/2 in length X 9/16 in width

Type

Four hole adjustable corner angle, 90 deg

Material/finish

Finish

Electro-plated

Material

Steel

Material gauge

1/4"

Resources

Catalogs

Channel Nuts and Hardware Catalog Section

Strut Fittings Catalog Section

Specifications and datasheets

Eaton Specification Sheet - B112ZN

Eaton Corporation plc
Eaton House
30 Pembroke Road
Dublin 4, Ireland
Eaton.com

© 2024 Eaton. All Rights Reserved.

Eaton is a registered trademark.

All other trademarks are property of their respective owners.

Eaton.com/socialmedia