Aculux™
Precision Recessed Lighting

RECESSED ADJUSTABLE

3-1/4" OPEN APERTURE

Non-IC Rated, 50W PAR20 or 75W PAR16

TC13N, 430N TRIM

Project: _____

Fixture Type: _____

Location: _____

Contact/Phone: _____



PRODUCT DESCRIPTION

Recessed adjustable PAR20/PAR16 luminaire with 3¼" 20° angle-cut Alzak cone aperture and precision geared hot-aiming. Fixture has 50° visual cutoff to lamp and lamp image. Sealed Air-Loc housing ensures maximum energy savings and controls plenum sound transmission. Low profile non-IC housing is for use in non-insulated areas, or where insulation is spaced at least 3" from housing.

PRODUCT SPECIFICATIONS

Reflector .040" aluminum 20° angle-cut reflector in clear, gold, black, haze, or wheat haze Alzak finish provides 50° lamp and lamp image cut-off.

Trims Style Trim Ring, Self Flanged and Flush Mount reflectors utilize torsion spring retention for tight, secure fit to ceiling • Trim ring features beveled knife edge for clean ceiling interface • Self Flanged reflectors with polished or optional white painted flange • For flush mount installations in drywall ceilings use the FMA4 flush mount adapter • For flush mount installations in wood, stone, or tile ceilings the FMA4-SC*** must be used (specify ceiling thickness and adapter finish).

Socket Medium base porcelain socket with nickel plated copper screw shell.

Lamp One 50W PAR20 or 75W PAR16 lamp.

Adjustability Acu-Aim™ precision geared hot-aiming achieves 370° rotation, 20° tilt • Optimized center lamp beam optics translates lamp forward as it is aimed off nadir, insuring maximum light and low brightness • Black aiming mechanism with shield prevents visibility into fixture and preserves dark aperture • Shield hinges out of way to facilitate maintenance.

Codes/Labels UL and cUL listed for through branch wiring, damp locations • Meets energy code Air Leakage requirements per ASTM E283 • Product thermally protected • Union made.

Patented (US Patent 8,038,113) Pro-VI™ Bar Hanger System With locking set screws, permits quick placement of housing within 24" O.C. joists or suspended ceilings • Robust bar eliminates flexing regardless of fixture position • Integral T-bar notch with locking tabs secures housing to suspended ceiling grid • Captive bugle-headed ring shank nail for quick one-step installation • Bar Hanger foot aligns to bottom of construction joist and breaks away for use in suspended ceilings.

Junction Box Rated for 8 No. 12 AWG 90° C through branch circuit conductors and includes (5) ½", (1) ¾", and (4) Non-metallic sheathed cable knock-outs • Push-in electrical connectors for field connections.

Housing/Mounting Frame Black steel plaster frame and housing painted for visually dark interior • V-Notch in plaster frame aids fixture alignment during installation • Patent pending Tru-Line™ Adjustment Mechanism featuring +/- ½" translation aids fixture alignment after installation, prior to drywall.

Ceiling Thickness 1/2" – 7/8" ceiling standard • For thicker ceilings, order CTA4N-125 (7/8"-1 1/4"), CTA4N-163 (1 1/4"-1 5/8") or CTA4N-200 (1 5/8"– 2") • CTA4N not required for wood, stone, or tile flush mount applications.

DIMENSIONS

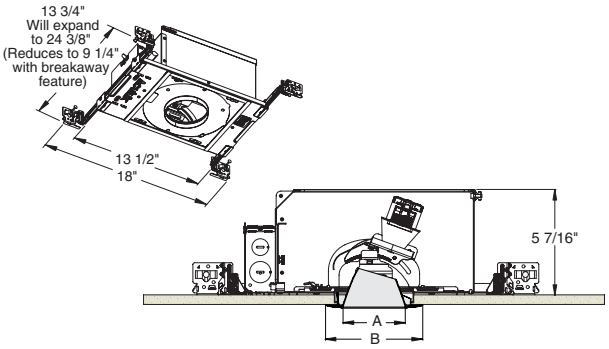

4 1/4" CEILING CUTOUT
(REFER TO INSTRUCTION SHEET FOR FLUSH MOUNT CEILING CUTOUT)

	A	B
Trim Ring	3 1/4"	5"
Self Flanged	3 3/8"	4 5/8"
Flush Mount	3 3/8"	3 7/8"

Ordering Information

Housing, trim and accessories each ordered separately

Example: **TC13N**

Housing		Options
	-	
TC13N	**CP**	Chicago Plenum

Example: **430NC-WH**

Trim/Description



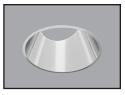

Trim Ring[1]	Self Flanged[2]	Flush Mount[3]	Description
430NB-WH	**430NB-SF**	**430NB-FM**	Black Cone
430NC-WH	**430NC-SF**	**430NC-FM**	Clear Cone
430NHZ-SC	-	-	Haze Cone
430NHZ-WH	**430NHZ-SF**	**430NHZ-FM**	Haze Cone, White Ring
430NWHZ-ABZ	-	-	Wheat Haze Cone
430NWHZ-WH	**430NWHZ-SF**	**430NWHZ-FM**	Wheat Haze Cone, White Ring

[1]Trim Ring Finish: ABZ - Classic Aged Bronze, SC - Satin Chrome, WH - White.

[2]For self flanged reflector with optional white painted flange, replace "-SF" suffix with "-SFWH".

[3]Flush Mount trims must be used with Flush Mount Adapter, ordered separately.

Product specifications subject to change without notice.

Flush Mount Adapters

FMA4	Drywall Ceiling Adapter
FMA4-SC087-WH	Wood, Stone, Tile, 1/2"-7/8" Thick Ceiling, Adapter, White
FMA4-SC087-BL	Wood, Stone, Tile, 1/2"-7/8" Thick Ceiling, Adapter, Black
FMA4-SC125-WH	Wood, Stone, Tile, 7/8"-1 1/4" Thick Ceiling, Adapter, White
FMA4-SC125-BL	Wood, Stone, Tile, 7/8"-1 1/4" Thick Ceiling, Adapter, Black
FMA4-SC163-WH	Wood, Stone, Tile, 1 1/4"-1 5/8" Thick Ceiling, Adapter, White
FMA4-SC163-BL	Wood, Stone, Tile, 1 1/4"-1 5/8" Thick Ceiling, Adapter, Black

Misc. Accessories

CTA4N-125	1 1/4" Thick Ceiling Adapter
CTA4N-163	1 5/8" Thick Ceiling Adapter
CTA4N-200	2" Thick Ceiling Adapter

To order, specify catalog number.

Juno Lighting Group
an AcuityBrands company

RECESSED ADJUSTABLE

3-1/4" OPEN APERTURE

Non-IC Rated, 50W PAR20 or 75W PAR16

TC13N, 430N TRIM

CBCP • Centerbeam candlepower
FC • Footcandles at beam center (aim point)

In vertical aiming applications, aim point (X) is determined by dividing distance from the wall (D) by the tangent of the desired aim angle (A) (0.5774 for 30˚, 1.0 for 45˚).

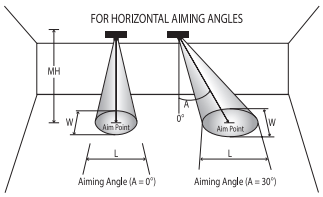

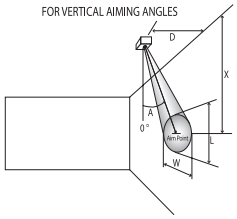

Horizontal Aiming Angles



Vertical Aiming Angles



Lamp	Beam Type	Beam Spread°	Rated Life	CBCP	0° MH	0° FC	0° L	0° W	30° FC	30° L	30° W	30° D	30° FC	30° X	30° L	30° W
50W PAR20 Halogen	SP	**10°**	2500	4600	6	128	1.0	1.0	83	1.4	1.2	2	144	3.5	5.5	2.1
					8	72	1.4	1.4	47	1.9	1.6	3	64	5.0	2.1	1.0
					10	46	1.7	1.7	30	2.3	2.0	4	36	6.9	2.9	1.4
					12	32	2.1	2.1	21	2.8	2.4	5	23	8.7	3.6	1.7
					14	24	2.4	2.4	15	3.3	2.8	6	16	10.4	4.3	2.1
	FL	**30°**	2500	1200	4	75	2.1	2.1	49	2.9	2.5	2	38	3.5	5.5	2.1
					5	48	2.7	2.7	31	3.7	3.1	3	17	5.2	8.2	3.2
					6	33	3.2	3.2	22	4.4	3.7	4	9	6.9	10.9	4.3
					7	25	3.8	3.8	16	5.1	4.3	5	6	8.7	13.7	5.4
					8	19	4.3	4.3	12	5.9	5.0	6	4	10.4	16.4	6.4
45W PAR16 Halogen	NSP	**10°**	2000	5000	6	139	1.0	1.0	90	1.4	1.2	2	156	3.5	1.4	0.7
					8	78	1.4	1.4	51	1.9	1.6	3	69	5.2	2.1	1.0
					10	50	1.7	1.7	32	2.3	2.0	4	39	6.9	2.9	1.4
					12	35	2.1	2.1	23	2.8	2.4	5	25	8.7	3.6	1.7
					14	26	2.4	2.4	17	3.3	2.8	6	17	10.4	4.3	2.1
	NFL	**27°**	2000	1400	3	156	1.4	1.4	101	2.0	1.7	1	175	1.7	2.3	1.0
					5	56	2.4	2.4	36	3.3	2.8	2	44	3.5	4.6	1.9
					7	29	3.4	3.4	19	4.6	3.9	3	19	5.2	7.0	2.9
					9	17	4.3	4.3	11	5.9	5.0	4	11	6.9	9.3	3.8
					11	12	5.3	5.3	8	7.2	6.1	5	7	8.7	11.6	4.8
60W PAR16 Halogen	NSP	**10°**	2000	5400	6	150	1.0	1.0	97	1.4	1.2	2	169	3.5	1.4	0.7
					8	84	1.4	1.4	55	1.9	1.6	3	75	5.2	2.1	1.0
					10	54	1.7	1.7	35	2.3	2.0	4	42	6.9	2.9	1.4
					12	38	2.1	2.1	24	2.8	2.4	5	27	8.7	3.6	1.7
					14	28	2.4	2.4	18	3.3	2.8	6	19	10.4	4.3	2.1
	NFL	**30°**	2000	1550	4	97	2.1	2.1	63	2.9	2.5	2	48	3.5	5.5	2.1
					6	43	3.2	3.2	28	4.4	3.7	3	22	5.2	8.2	3.2
					8	24	4.3	4.3	16	5.9	5.0	4	12	6.9	10.9	4.3
					10	16	5.4	5.4	10	7.3	6.2	5	8	8.7	13.7	5.4
					12	11	6.4	6.4	7	8.8	7.4	6	5	10.4	16.4	6.4
75W PAR16 Halogen	NSP	**10°**	2000	7500	6	208	1.0	1.0	135	1.4	1.2	2	234	3.5	1.4	0.7
					8	117	1.4	1.4	76	1.9	1.6	3	104	5.2	2.1	1.0
					10	75	1.7	1.7	49	2.3	2.0	4	59	6.9	2.9	1.4
					12	52	2.1	2.1	34	2.8	2.4	5	38	8.7	3.6	1.7
					14	38	2.4	2.4	25	3.3	2.8	6	26	10.4	4.3	2.1
	NFL	**30°**	2000	1900	4	119	2.1	2.1	77	2.9	2.5	2	59	3.5	5.5	2.1
					6	53	3.2	3.2	34	4.4	3.7	3	26	5.2	8.2	3.2
					8	30	4.3	4.3	19	5.9	5.0	4	15	6.9	10.9	4.3
					10	19	5.4	5.4	12	7.3	6.2	5	10	8.7	13.7	5.4
					12	13	6.4	6.4	9	8.8	7.4	6	7	10.4	16.4	6.4

The beam spread in degrees and the beam "L" and "W" in the following tables are computed at 50% of centerbeam candlepower and represent areas of "effective illumination."

JUNO LIGHTING GROUP
an AcuityBrands company

1300 S. Wolf Road • Des Plaines, IL 60018 • Phone (847) 827-9880 • Fax (847) 827-2925
220 Chrysler Drive • Brampton, Ontario • Canada L6S 6B6 • Phone (905) 792-7335 • Fax (905) 792-0064
Visit us at www.junolightinggroup.com

Printed in U.S.A. ©2016 Acuity Brands Lighting, Inc.