BALDOR
A MEMBER OF THE ABB GROUP

BALDOR • RELIANCE

Product Information Packet

FDL3712TM

10HP,1725RPM,1PH,60HZ,215T,3750LC,TEFC,F

Copyright © All product information within this document is subject to Baldor Electric Company copyright © protection, unless otherwise noted.

Part Detail							
Revision:	K	**Status:**	PRD/A	**Change #:**		**Proprietary:**	No
Type:	AC	**Prod. Type:**	3750LC	**Elec. Spec:**	37WGT040	**CD Diagram:**	CD0152
Enclosure:	TEFC	**Mfg Plant:**		**Mech. Spec:**	37N374	**Layout:**	37LYN374
Frame:	215T	**Mounting:**	F1	**Poles:**	04	**Created Date:**	12-11-2013
Base:	RG	**Rotation:**	R	**Insulation:**	F	**Eff. Date:**	05-16-2016
Leads:	2#10 A PH,3#14 B&J					**Replaced By:**	
Literature:		**Elec. Diagram:**					

BALDOR A MEMBER OF THE ABB GROUP

Nameplate NP1280L

CAT.NO.	FDL3712TM						
SPEC.	37N374T040G1						
HP	10						
VOLTS	230						
AMP	40						
RPM	1725						
FRAME	215T	**HZ**	60			**PH**	1
SER.F.	1.00	**CODE**	G	**DES**	L	**CL**	F
NEMA-NOM-EFF	84	**PF**	94				
RATING	40C AMB-CONT						
CC						**USABLE AT 208V**	
DE	6307	**ODE**	6206				
ENCL	TEFC	**SN**					

BALDOR A MEMBER OF THE ABB GROUP

AC Induction Motor Performance Data

Record # 46112 - Typical performance - not guaranteed values

Winding: 37WGT040-R001	**Type:** 3750LC	**Enclosure:** TEFC

Nameplate Data				230 V, 60 Hz: Single Voltage Motor	
Rated Output (HP)	10			Full Load Torque	30.5 LB-FT
Volts	230			Start Configuration	direct on line
Full Load Amps	40			Breakdown Torque	92.7 LB-FT
R.P.M.	1725			Pull-up Torque	67.8 LB-FT
Hz	60	Phase	1	Locked-rotor Torque	93.3 LB-FT
NEMA Design Code	L	KVA Code	G	Starting Current	309 A
Service Factor (S.F.)	1			No-load Current	16 A
NEMA Nom. Eff.	84	Power Factor	94	Line-line Res. @ 25ºC	0.20218 Ω A Ph 0.61074 Ω B Ph
Rating - Duty	40C AMB-CONT			Temp. Rise @ Rated Load	

Load Characteristics 230 V, 60 Hz, 10 HP

% of Rated Load	25	50	75	100	125	150
Power Factor	68	85	90	93	94	94
Efficiency	65.7	79.7	84.1	85.3	84.7	82.6
Speed	1788	1776	1763	1749	1732	1712
Line amperes	18.8	24.8	32.8	41.8	51.6	62.4

BALDOR A MEMBER OF THE ABB GROUP

Performance Graph at 230V, 60Hz, 10.0HP Typical performance - Not guaranteed values

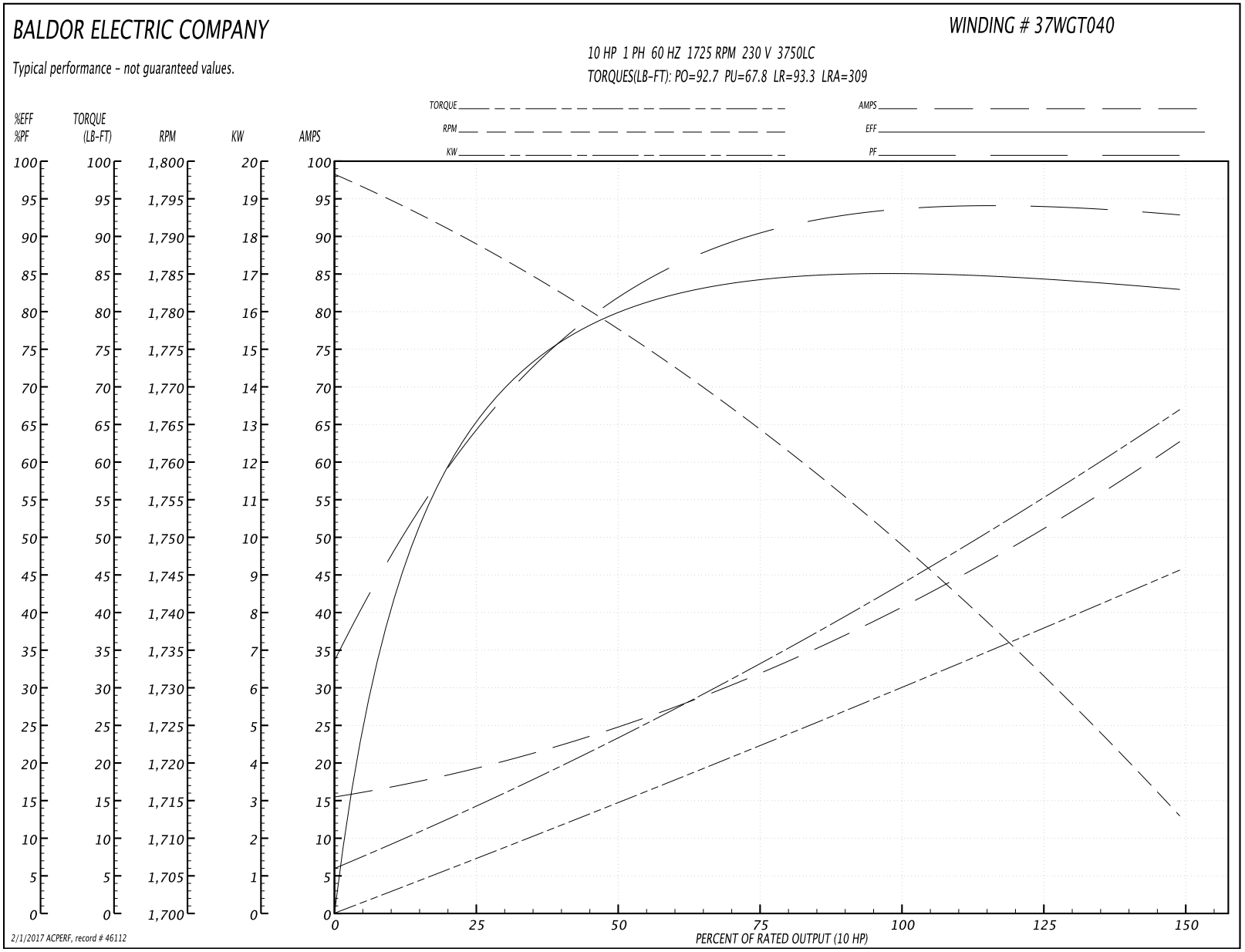

BALDOR
A MEMBER OF THE ABB GROUP

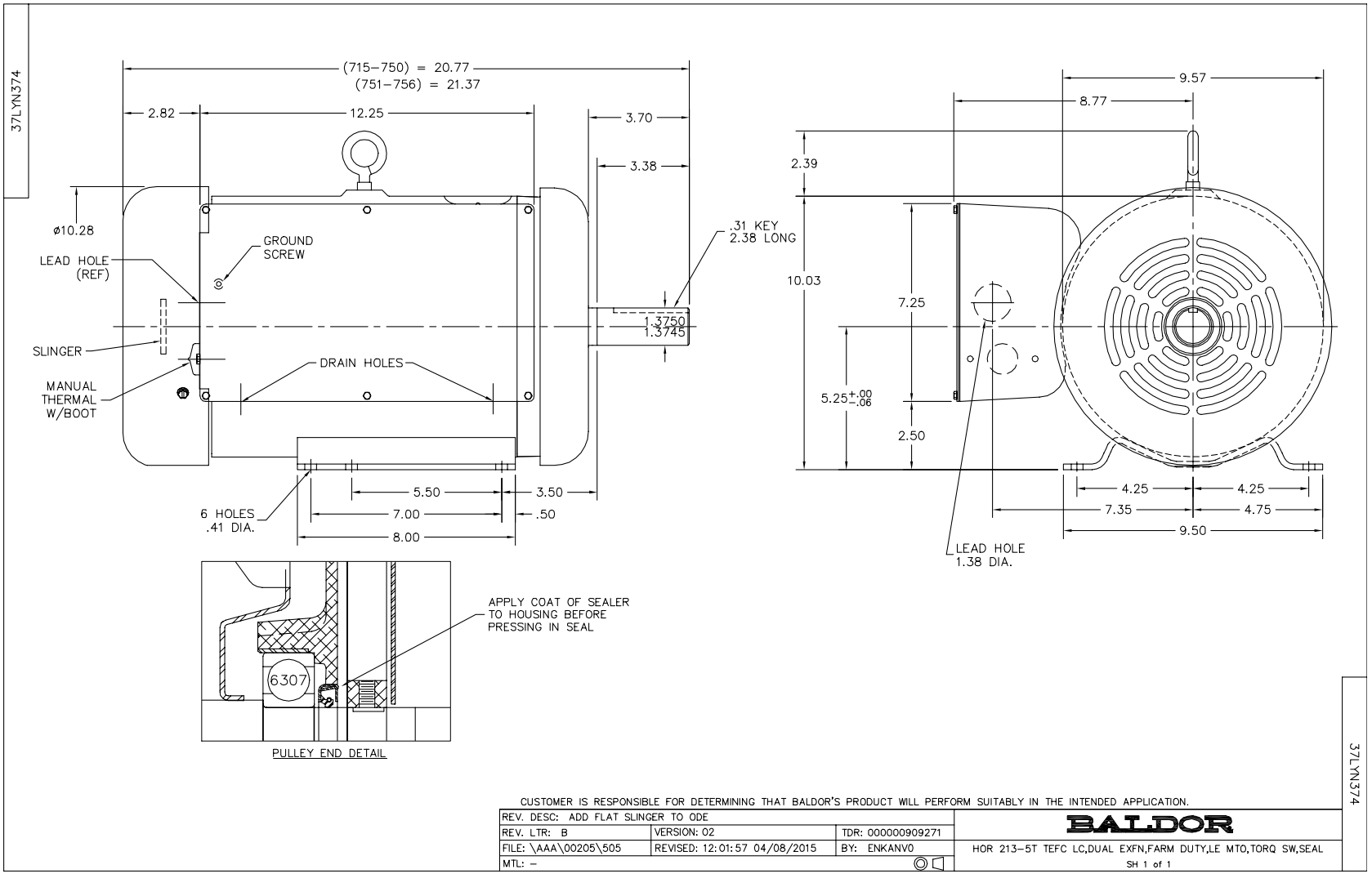

CUSTOMER IS RESPONSIBLE FOR DETERMINING THAT BALDOR'S PRODUCT WILL PERFORM SUITABLY IN THE INTENDED APPLICATION.

REV. DESC: ADD FLAT SLINGER TO ODE		
REV. LTR: B	VERSION: 02	TDR: 000000909271
FILE: \AAA\00205\505	REVISED: 12:01:57 04/08/2015	BY: ENKANVO
MTL: –		

BALDOR

HOR 213–5T TEFC LC,DUAL EXFN,FARM DUTY,LE MTO,TORQ SW,SEAL

SH 1 of 1

BALDOR A MEMBER OF THE ABB GROUP

CD0152

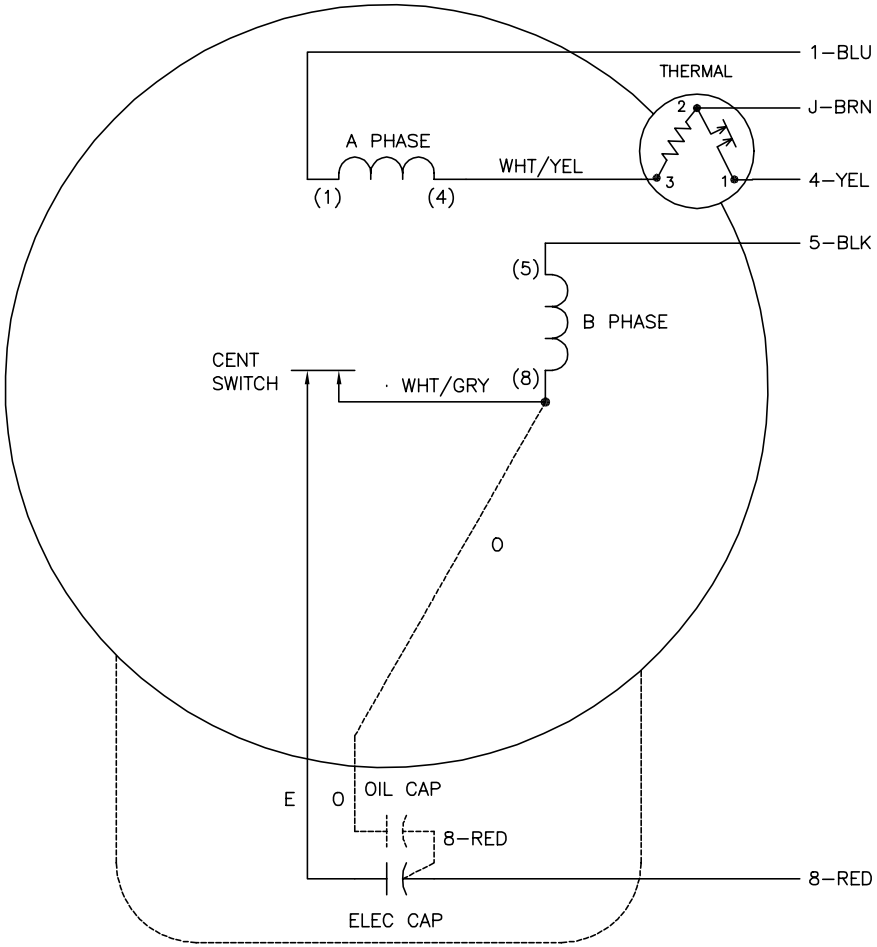

	LINE A	LINE B	JOIN
STD	1,8	4	J,5
OPP	1,5	4	J,8

NOTES:

1. STANDARD ROTATION IS CCW FACING END OPPOSITE SHAFT EXTENSION.
2. MULTIPLE CAPACITORS ARE CONNECTED IN PARALLEL UNLESS OTHERWISE SPECIFIED.
3. OPTIONAL OIL CAPACITOR IS PROVIDED WHEN SPECIFIED.
4. CAPACITORS MAY BE SEPERATELY MOUNTED.
5. LEAD COLORS ARE OPTIONAL. LEADS MUST ALWAYS BE NUMBERED AS SHOWN.

REV. DESC: REMOVE OPTIONAL THERMAL CONNECTION			BALDOR ELECTRIC Co.
REV. LTR: D	VERSION: 01	TDR: 000000373039	
CD0152	FILE: \AAA\00026\903	REVISED: 11:23:45 08/11/2005	TYPE L OR LC, SV, REV, 5 LDS, THERM, CAPS MAY BE SEP MTD
	MTL: –	BY: ENJOEPO	

CD0152

BALDOR A MEMBER OF THE ABB GROUP