Marine IEC Pin and Sleeve

100A, 3 PhaseY, 120/208V, 4 Pole, 5 Wire

Corrosion Resistant Watertight Receptacle

Features

- Insulated non-metallic housing
- Color coded housings for easy identification



Ordering Information

Description	UPC	Catalog Number
Watertight receptacle for Standard Service	783585510057	**M5100R9**

Device Color
Gray

Standards

UL Listed, File E146032
CSA StandardC22.2 No. 182.1
UL Classified to IEC 60309-1 IEC 60309-2

Specifications

Housing	Zytel® 101 Nylon
Mounting Flange	Zytel® 101 Nylon
Cover	Reinforced Thermoplastic Polyester
Cover Screw	Nickel-plated brass
Gaskets	Solid Neoprene

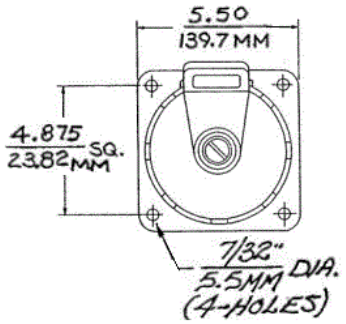

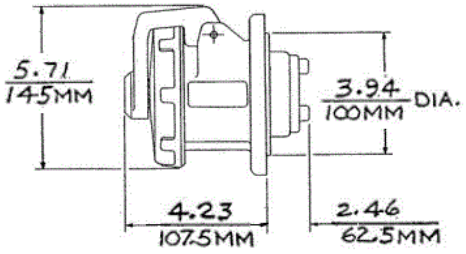

Performance

Electrical

Current Interrupting	Certified for current interrupting at full rated current
Dielectric Voltage	Withstand 3000V AC
Max. Working Voltage	600V RMS

Mechanical

Impact Resistance	Per CSA C22.2 No. 182.1 / UL1682
Product Identification	Ratings are a permanent part of the device housing
Terminal Identification	Terminals identified in accordance with North American and IEC conventions

Environmental

Flammability	HB or better per UL 94 or CSA C22.2 No. 0.17
Ingress Protection	IP67 Suitability
Moisture Resistance	Watertight per IEC 60309-1
Operating Temperatures	Maximum Continuous 75°C; Minimum - 40°C w/o impact

Online Resources

Customer Use Drawing
eCatalog
Installation Instructions

Dimensions in Inches (mm)

Wiring Device-Kellems