TOUCH-SAFE HEATERS

INDUSTRY STANDARDS

cURus Component Recognized; File No. E150057

IP 20
CE

APPLICATION

Protect electrical, mechanical equipment from low temperatures, condensation, and corrosion with this heater, which will maintain stable enclosure temperatures by using natural convection resulting in current circulation of warm air.

SPECIFICATIONS

- **Heating element PTC resistor - temperature limiting**
- **Double Insulated Protection**
- **Mounting clip for 35mm DIN rail, EN 60 715**
- **Vertical mount**

FINISH

- **UL 94 V-0 Black Plastic Housing**

Performance Data

CATALOG NUMBERS	DAH101TS	DAH201TS	DAH501TS
Electrical Data			
Rated Voltage (AC/DC)	110/120	110/120	110/120
Power Consumption (Watts)	10	20	50
Start Nominal Current (Amps)	2.5	4.5	8
Unit Construction			
H x W x D (in./mm)	3.9 X 1.5 X 3.0/98 x 38 x 75	3.9 X 1.5 X 3.0/98 x 38 x 75	4.3 X 2.4 X 3.5/110 x 60 x 90
Weight (oz)	5.0	6.1	10.4

SEMICONDUCTOR HEATERS

INDUSTRY STANDARDS

cURus Component Recognized; File No. E150057

IEC IP54
CE

APPLICATION

Protect electrical, pneumatic, hydraulic and mechanical equipment from low temperatures, condensation and corrosion with this heater, which maintains a stable enclosure temperature.

SPECIFICATIONS

- **QUD!)Qptujwf!Uf n qfsbuvsf!Dpf fÆdjfou*! i fbujoh!fnf n fou**
- **Mounting clip for 35-mm DIN rails EN 50022**

FINISH

- **Black anodized, extruded aluminum.**

Performance Data/ Rd l hbnmc t bsnq Gd`sdq

CATALOG NUMBERS			
	DAH101	**DAH301**	**DAH601**
ELECTRICAL DATA			
Rated Voltage	**AC/DC 110/120**	**AC/DC 110/120**	**AC/DC 110/250**
Power Consumption (Watts)	**10**	**30**	**60**
Start Nominal Current (Amps)	**0.8**	**1.2**	**2.5**
HEATING PERFORMANCE			
Watts	**10**	**30**	**60**
UNIT CONSTRUCTION			
L (in./mm)	**1.97/50**	**3.93/100**	**5.5/140**
Weight (lb./kg)	**0.45/0.20**	**0.66/0.30**	**1.10/0.50**

Clearance Range for
DAH101 and DAH301

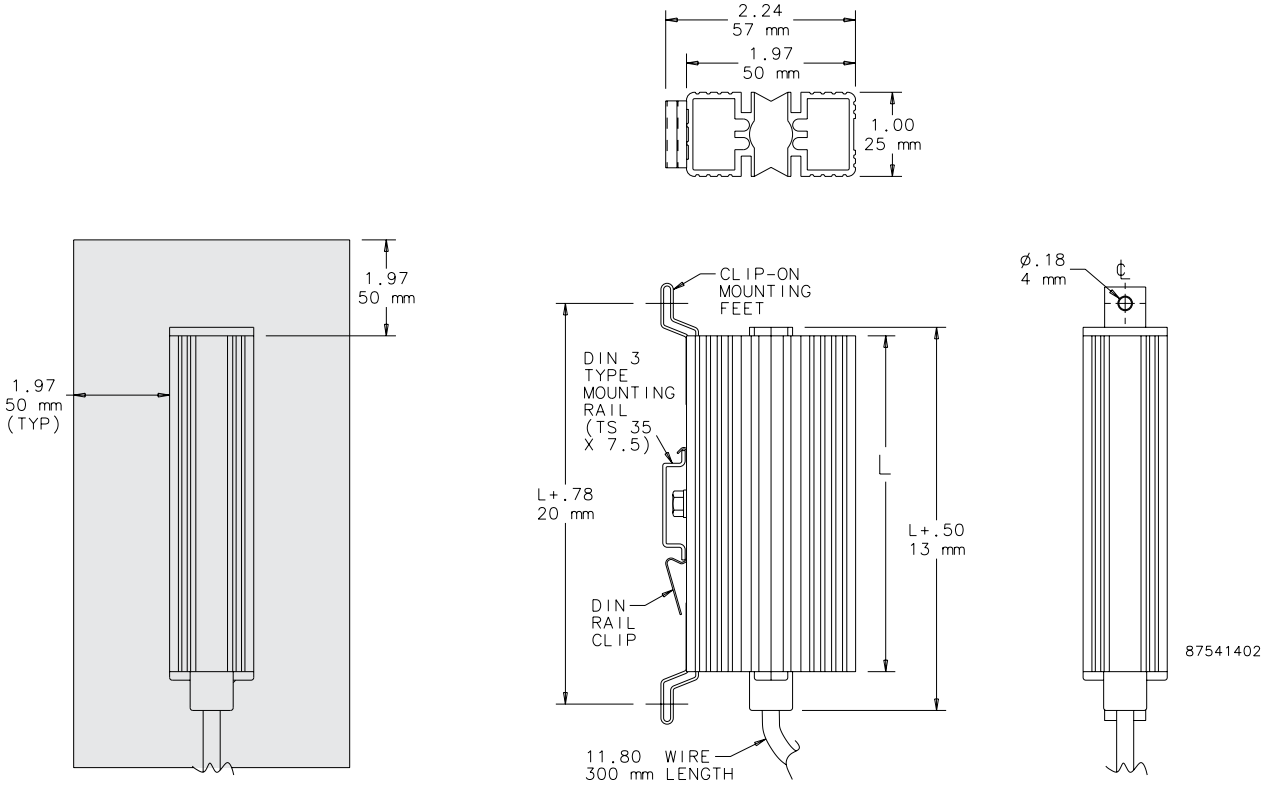

Clearance Range for DAH601

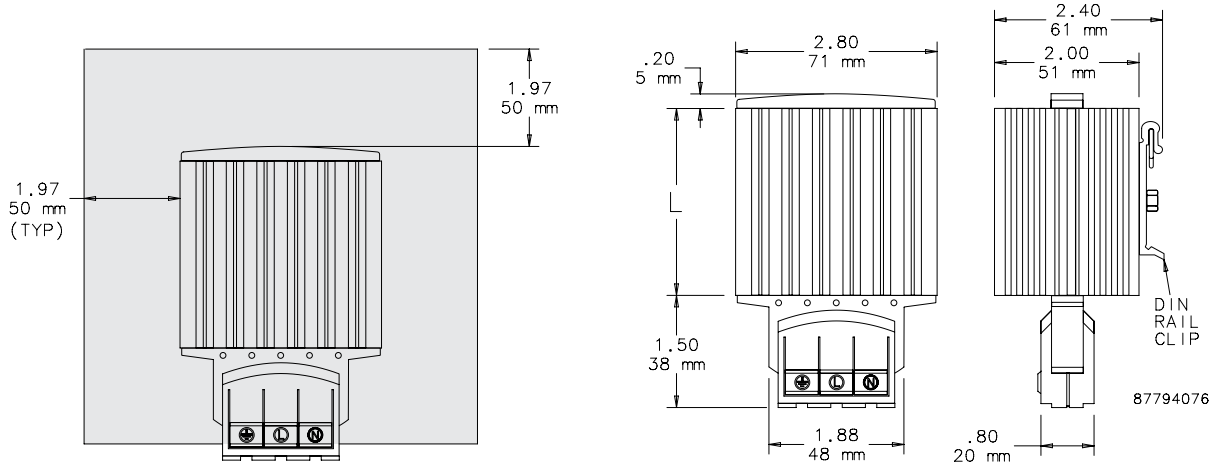

ELECTRIC HEATERS

115/230 Volt
100/200 Watt

115/230 Volt
400/800 Watt

115/230 Volt
1300 Watt

INDUSTRY STANDARDS

UL 508A Component Recognized; File No. E61997

DTB!DfsujÁfe-!DTB!Gjnf!Op/!MS53297
CE

APPLICATION

Protect mechanical, electrical and electronic equipment from low temperatures, condensation and corrosion with this thermostatically controlled, fan-driven heater that maintains a stable enclosure temperature.
Fan draws cool air from the bottom of the enclosure and passes this air across the thermostat and heating element before being released into enclosure cavity. Heated air is discharged through the top of the heater unit.

SPECIFICATIONS

- Aluminum housing
- Uifsnptubu!sbohf!bekvtubcnf!gspn!1!G!up!211!G!).29!D!up!49!D*
- Four 10-32 x self-tapping screws are included with each heater
- Ball bearing fan
- Terminal strip with clamp connector that accepts both solid and stranded wire

FINISH

- Brushed aluminum

CAUTION

› › ›