UL 1686 C1 Pin and Sleeve

30A, 600/250V AC/DC, 3 Pole, 4 Wire

InsulgripÈ Pin and Sleeve Receptacle

Features

- Beryllium copper spring maintains high unit pressure on mating sleeves
- Closure cap with neoprene gasket for watertight seal when not in use
- O-Rings- provide a watertight and dust tight seal around pins negating contamination to the wire chamber
- Pin chamber confines arcing within the interior chamber



Ordering Information

Description	UPC	Catalog Number
Pin and Sleeve, Watertight Insulgrip Receptacle	783585010168	**HBL430RS1W**

Device Color	Grounding Style
Aluminum	Style 1

Standards

UL Standard 1682
CSA Certified to CSA Spec. C22.2 No. 182.1
UL Listed and CSA Certified Type 4X

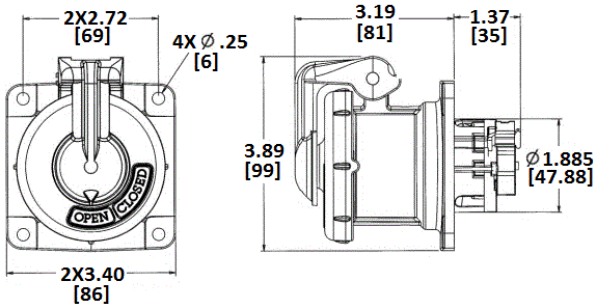

Specifications

Housing	Epoxy Painted Aluminum
Gaskets & Seals	Neoprene
Contact Carrier	Thermoset Polyester
Pin Spring	Beryllium Copper
Cover	Epoxy Painted Aluminum

Performance

Electrical	
Current Interrupting	Certified for current interrupting at full rated current
Dielectric Voltage	Withstands 3,000V AC
Max. Working Voltage	600V AC RMS
Mechanical	
Impact Resistance	Per CSA C22.2, No. 182.1, UL 1682
Product Identification	Identification and ratings are permanently fastened to the device housing
Terminal Identification	Terminals identified in accordance with UL 1686(1, 2, 3, Green)
Environmental	
Flammability (Enclosure)	UL 94V-0 and CSA C22.2 No. 0.17
Moisture Resistance	Type 3, 4, 4X per UL 50E and CSA 22.2, No. 94
Operating Temperatures	Max. Continuous 75°C; Min. -40°C w/o impact -25° with impact

Accessories

Back Boxes

Online Resources

Customer Use Drawing
eCatalog
Installation Instructions

Dimensions in Inches (mm)

Wiring Device-Kellems