Hubbell Raceway

HBL2000 and HBL2000A Series

Ground Clip

Features

- Uses HBL 2000 Series raceway and fitting and accessories to customize the install
- Scratch resistant finish
- For use upto 600V AC

Ordering Information

Accessory Type	Color	UPC Number
Ground Clip	Galvanized Steel	783585214184

Listings

UL Standard UL 5
E253976 /E253830 /E253833
CSA Standard C22.2 no. 62

Specifications

Raceway Series	HBL2000 and HBL2000A Series
Material	Steel
Finish	Galvanized Steel

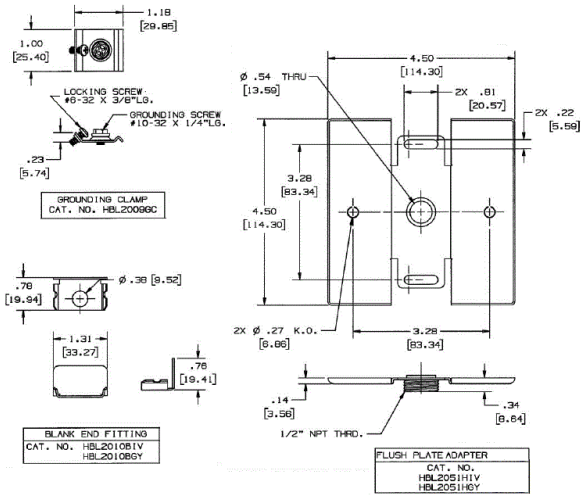

Related Products

Raceway Base and Cover (300V)	HBL2000BCIV
Raceway Base and Cover (600V)	HBL2000BCAIV
Raceway Base	HBL2000B5IV
Raceway Cover	HBL2000CIV

Online Resources

Customer Sales Drawings
eCatalog
Installation Instructions

Dimensions in Inches (mm)

Hubbell Wiring Device-Kellems • Hubbell Incorporated (Delaware) • 40 Waterview Drive • Shelton, CT 06484
Phone (800) 288-6000 • Fax (800) 255-1031 • Specifications subject to change without notice.

Wiring Device-Kellems