BALDOR
A MEMBER OF THE ABB GROUP

BALDOR • RELIANCE

Product Information Packet

M6007A

.5HP,1725RPM,3PH,60HZ,48,X3416M,XPFC,F1

Copyright © All product information within this document is subject to Baldor Electric Company copyright © protection, unless otherwise noted.

Part Detail							
Revision:	Y	**Status:**	PRD/A	**Change #:**		**Proprietary:**	No
Type:	AC	**Prod. Type:**	3416M	**Elec. Spec:**	34WG1543	**CD Diagram:**	CD0007
Enclosure:	XPFC	**Mfg Plant:**		**Mech. Spec:**	34-5427	**Layout:**	34LY5427
Frame:	48	**Mounting:**	F1	**Poles:**	04	**Created Date:**	
Base:	RG	**Rotation:**	R	**Insulation:**	B	**Eff. Date:**	05-26-2016
Leads:	12#18					**Replaced By:**	
Literature:		**Elec. Diagram:**					

BALDOR A MEMBER OF THE ABB GROUP

Nameplate NP0016XPSL

NO.		CC					
SER.							
SPEC.	34-5427-1543						
CAT.NO.	M6007A						
HP	.5	T. CODE	T3C				
VOLTS	208-230/460						
AMPS	2.1-2/1						
RPM	1725						
HZ	60	PH	3	CL	B		
SER.F.	1.00	DES	B	CODE	L		
RATING	40C AMB-CONT						
FRAME	48	NEMA-NOM-EFF	74				
USABLE AT 208V	2.1	PF	63				
BLANK							

BALDOR A MEMBER OF THE ABB GROUP

AC Induction Motor Performance Data

Record # 6627 - Typical performance - not guaranteed values

Winding: 34WG1543-R002	**Type:** 3416M	**Enclosure:** XPFC

Nameplate Data				460 V, 60 Hz: High Voltage Connection	
Rated Output (HP)	.5			Full Load Torque	1.5 LB-FT
Volts	208-230/460			Start Configuration	direct on line
Full Load Amps	2.1-2/1			Breakdown Torque	6.5 LB-FT
R.P.M.	1725			Pull-up Torque	4.5 LB-FT
Hz	60	Phase	3	Locked-rotor Torque	5.6 LB-FT
NEMA Design Code	B	KVA Code	L	Starting Current	6.7 A
Service Factor (S.F.)	1			No-load Current	0.89 A
NEMA Nom. Eff.	74	Power Factor	63	Line-line Res. @ 25ºC	33 Ω
Rating - Duty	40C AMB-CONT			Temp. Rise @ Rated Load	59°C

Load Characteristics 460 V, 60 Hz, 0.5 HP

% of Rated Load	25	50	75	100	125	150
Power Factor	27	39	51	60	67	72
Efficiency	49.8	65	71.7	74.5	75.6	75.5
Speed	1785	1770	1756	1737	1724	1705
Line amperes	0.9	0.94	0.98	1	1.15	1.27

BALDOR A MEMBER OF THE ABB GROUP

Performance Graph at 460V, 60Hz, 0.5HP Typical performance - Not guaranteed values

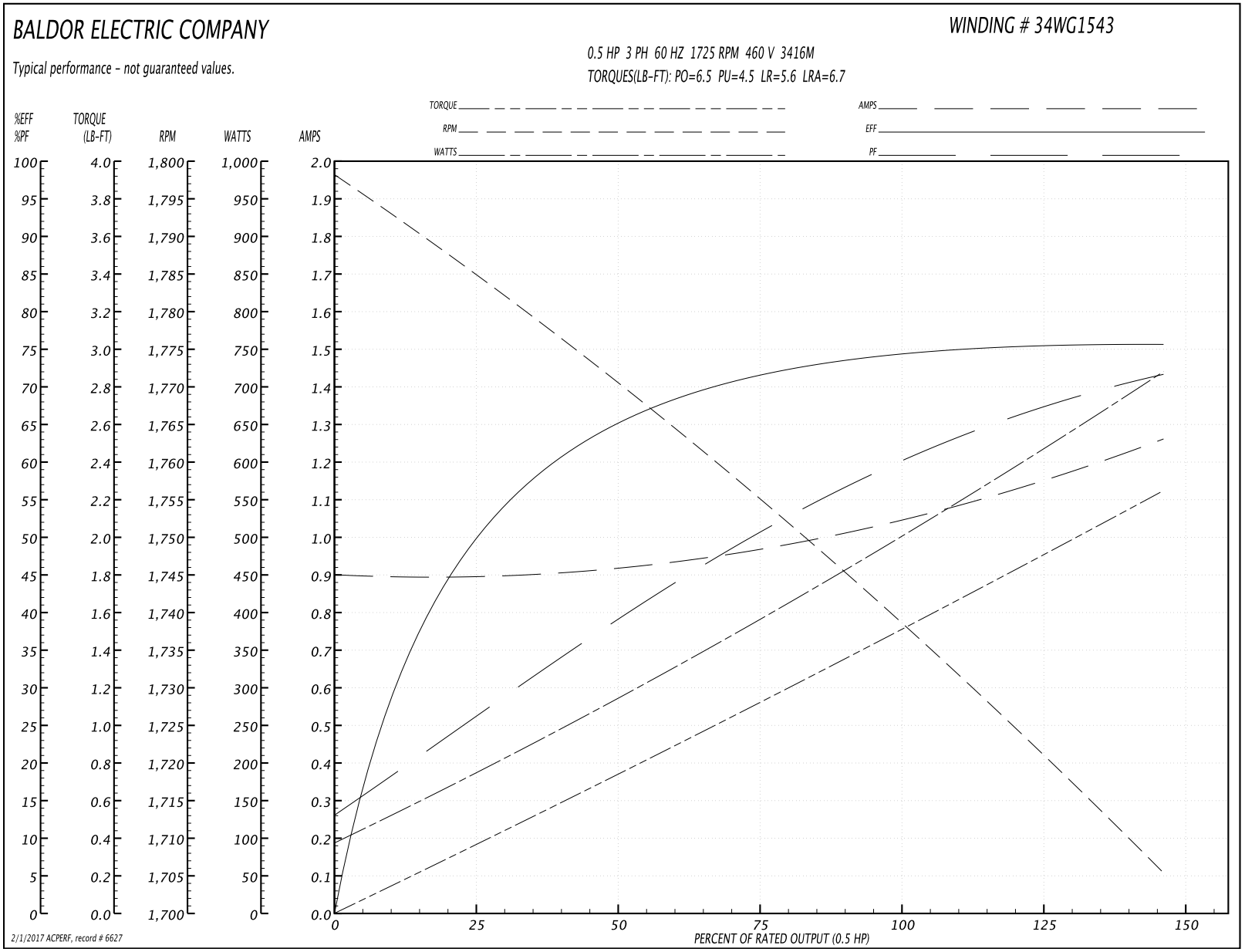

BALDOR
A MEMBER OF THE ABB GROUP

AC Induction Motor Performance Data

Record # 20790 - Typical performance - not guaranteed values

Winding: 34WG1543-R002	**Type:** 3416M	**Enclosure:** XPFC

Nameplate Data				208 V, 60 Hz: Low Voltage Connection	
Rated Output (HP)	.5			Full Load Torque	1.51 LB-FT
Volts	208-230/460			Start Configuration	direct on line
Full Load Amps	2.1-2/1			Breakdown Torque	5.25 LB-FT
R.P.M.	1725			Pull-up Torque	3.56 LB-FT
Hz	60	Phase	3	Locked-rotor Torque	4.43 LB-FT
NEMA Design Code	B	KVA Code	L	Starting Current	11.8 A
Service Factor (S.F.)	1			No-load Current	1.39 A
NEMA Nom. Eff.	74	Power Factor	63	Line-line Res. @ 25ºC	8.35 Ω
Rating - Duty	40C AMB-CONT			Temp. Rise @ Rated Load	50°C
				Locked-rotor Power Factor	65
				Rotor inertia	0.0381 LB-FT2

Load Characteristics 208 V, 60 Hz, 0.5 HP

% of Rated Load	25	50	75	100	125	150
Power Factor	37	52	65	77	79	81
Efficiency	49.3	64.9	71.8	74.4	75.5	75.5
Speed	1782	1765	1748	1725	1707	1683
Line amperes	1.43	1.54	1.67	1.79	2.14	2.47

BALDOR A MEMBER OF THE ABB GROUP

Performance Graph at 208V, 60Hz, 0.5HP Typical performance - Not guaranteed values

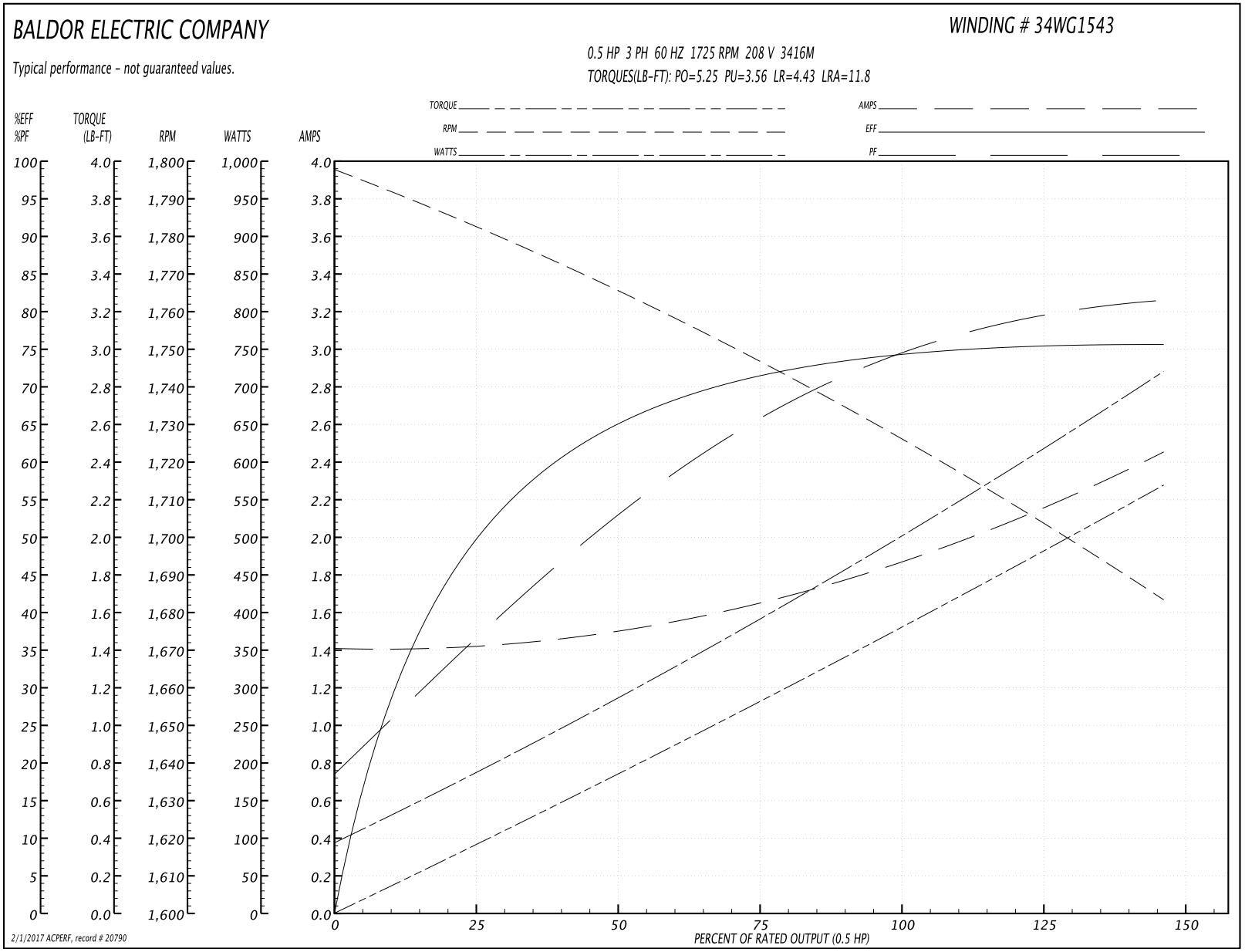

BALDOR
A MEMBER OF THE ABB GROUP

34LY5427

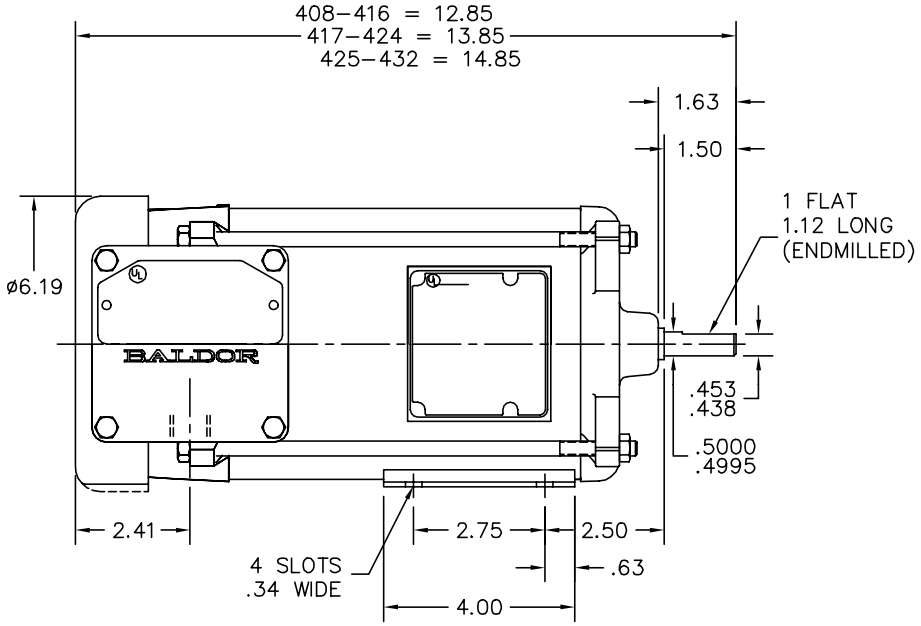

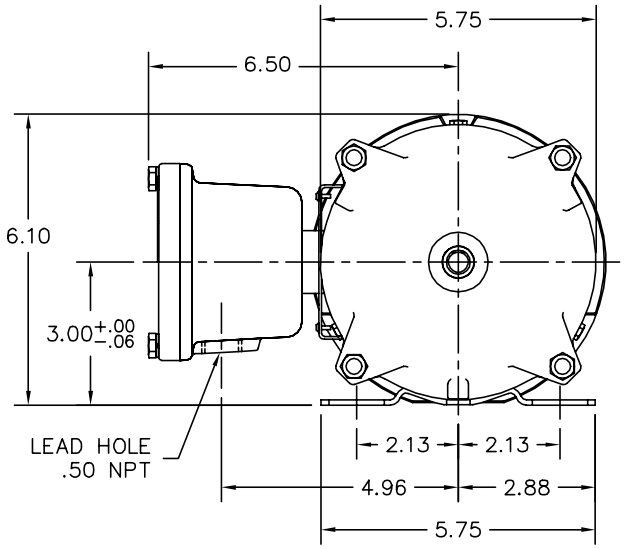

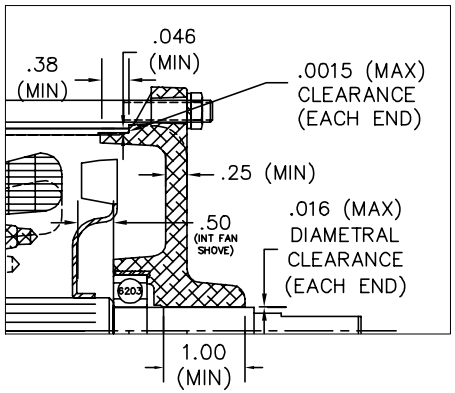

CUSTOMER IS RESPONSIBLE FOR DETERMINING THAT BALDOR'S PRODUCT WILL PERFORM SUITABLY IN THE INTENDED APPLICATION.

REV. DESC: UPDATE DWG		
REV. LTR: F	VERSION: 04	TDR: 000000918748
FILE: \AAA\00026\673	REVISED: 04:12:48 04/07/2015	BY: ENJERWO
MTL: –		

BALDOR

HORZ X34M 48 XPFC CL–I GP–D, CL–II GP–F&G, .50 NPT LEAD

SH 1 of 1

34LY5427

BALDOR A MEMBER OF THE ABB GROUP

CD0007

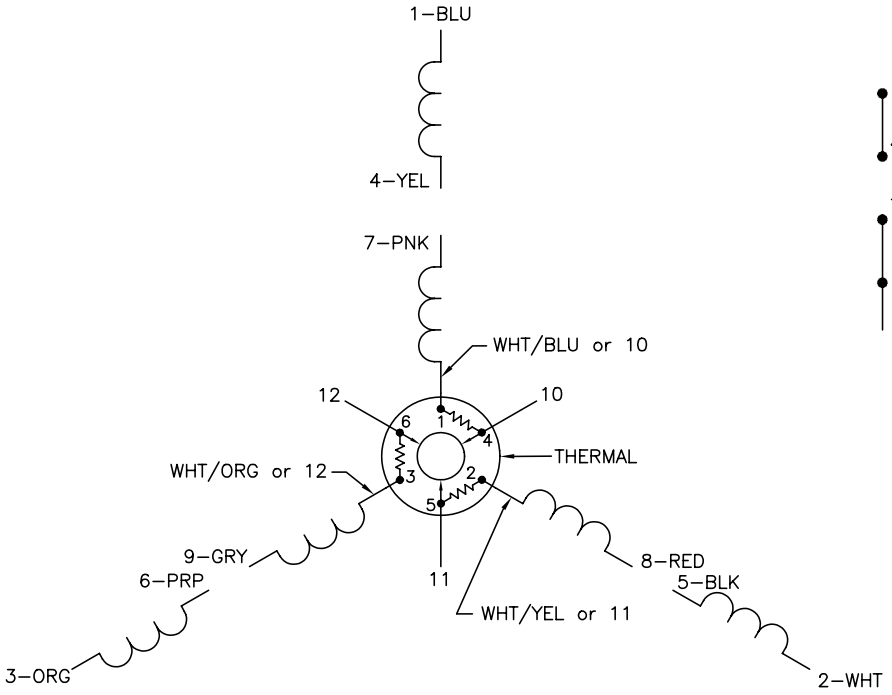

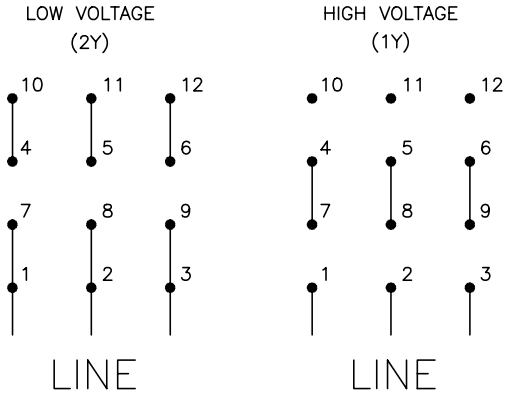

NOTES:

1. INTERCHANGE ANY TWO LINE LEADS TO REVERSE ROTATION.
2. ACTUAL NUMBER OF INTERNAL PARALLEL CIRCUITS MAY VARY.
3. LEAD COLORS ARE OPTIONAL. LEADS MUST ALWAYS BE NUMBERED AS SHOWN.

REV. DESC: ADDED "CK" PLANT CODE			BALDOR ELECTRIC Co.
REV. LTR: E	BY: EAH	REVISED: 05/06/99 17:1	TDR: 0181040
CD0007		FILE: AAA00008370	MDL: –
		MTL: –	3PH, DV, THERMAL, 12 LEADS

CD0007

BALDOR A MEMBER OF THE ABB GROUP