PanZone® TrueEdge Vertical Wall Mount Enclosure

PANDUIT®
SPECIFICATION SHEET

SPECIFICATIONS

The wall mount enclosures shall mount active equipment vertically in a low profile, on-wall configuration. The enclosure shall be capable of mounting up to 36 inches of active equipment depth and have the capability of vertical patching. Equipment brackets shall be adjustable for accommodation of server and/or switch applications. Enclosure shall be engineered to allow proper ventilation for use with various networking equipment including, but not limited to, Power over Ethernet (PoE) Switches and Uninterrupted Power Supplies (UPS). The vertical wall mount enclosure shall have a perforated top and bottom, which can be removed, for optimal airflow, heat dissipation, and equipment access. The optional filter-kit shall provide a NEMA 1 rating.

TECHNICAL INFORMATION

Dimensions:

Part Number	Active RU	Passive RU	Height in. (mm)	Width in. (mm)	Depth in. (mm)	Load Capacity lbs. (kg)
WME3BL	3 RU	3 RU	42 (1068)	28.5 (724)	9.5 (240)	200 (90)
WME6BL	6 RU	6 RU	42 (1068)	28.5 (724)	14.7 (374)	300 (136)
WME9BL	9 RU	9 RU	42 (1068)	28.5 (724)	19.9 (506)	400 (181)

Packaging:	Base, door, horizontal passive equipment brackets, E-rail equipment brackets, locking swing handle, (includes 2 keys), edge grommet, Tak-Ty® Hook & Loop Cable Ties, door hinges
Material:	Steel, powder coated
Standards:	IP20; UL 2416
Filter-Kit:	Easy to retrofit on an existing TrueEdge enclosure. The Filter-Kit provides a foam filter that wraps and covers the top perforations of the enclosure. This Filter-Kit eliminates any excess dust and debris from entering through the top of the enclosure. Filter Kits NEMA 1 rating. Does not change IP rating.

KEY FEATURES AND BENEFITS

Low profile:	Provides an efficient way to deploy switch and server systems in an open architecture environment
Configurable:	Used as a telecommunications room, extension of the telecommunications room, micro data center, or edge deployment. Suggested mounting arrangement within the enclosure should start with the longest depth equipment positioned at the back, progressing from longest to shortest. This allows or easy accessibility, cable management, and better airflow.
Thermal capacity:	Perforated top and bottom optimizes airflow for improved dissipation of heat generated from active equipment
Adjustable equipment rails:	Increases usable enclosure depth to 36" of available space within the enclosure for active equipment while maintaining the ability to mount patch panels; provides user preferred installation capabilities and a variety of configurations based on application
Removable and secure top cover and bottom plate:	Allows for easy installation and provides secure access to installed equipment

APPLICATIONS

The PanZone TrueEdge Vertical Wall Mount Enclosure provides a comprehensive architecture that allows up to 36 inches of active equipment depth to be mounted in a low-profile application. This low-profile wall mount enclosure houses traditional horizontal equipment vertically on a wall while minimizing network infrastructure investment to eliminating a rack or cabinet (TR in a BOX and Micro Data Center). The structurally engineered design provides for up to 36 inches of active equipment depth space. It has a premium static load rating with up to 400 pounds and best-in-class thermal ratings to eliminate equipment failure.

- **Scalable —** offering a variety of configurations for servers, switches, and edge computing
- **Strong —** able to withstand optimum load capacity for deployments of server and switch configurations
- **Configurable —** offered in 3 RU active (3 RU passive), 6 RU active (6 RU passive), or 9 RU active (9 RU passive) allowing customization opportunities to fit the needs of the user and deliver storage solutions that make a difference

Vertical Wall Mount Enclosure	
3 RU enclosure:	WME3**
6 RU enclosure:	WME6**
9 RU enclosure:	WME9**
Enclosure Accessories	
Filter Media Replacement:	WME^-FR
Filter-Kit:	WME^**-FKIT
Vertical 1 RU Bracket:	WME0UB
Fiber Enclosure Adapter Bracket 0 RU:	FEABRU
Active Equipment Rails:	WME^ERAIL
Horizontal 1 RU Bracket:	WME^1RU
Brush Pass-Through Kit:	WMEBR
Ground kit:	WMEGK
Fan kit:	PZAEFAN
Euro fan kit:	PZAEFK-E
Mini-Com® Patch Panels	
Mini-Com Modular Patch Panel with Labels:	CPPL^^WBLY
Mini-Com High Density Modular Patch Panel:	CPP^^HDWBLY
Mini-Com Modular Patch Panel:	CPP^^FMWBLY
Panduit UPS and PDU Monitoring Equipment	
UPS:	U01N11V
Lithium UPS:	U01N11L
PDU:	P08D09M
PDU Security Handle:	ACF05 ACF06
PDU Security Handle Temperature and Door Sensor:	ACF10 ACF11
PDU Security Handle Harness:	ACF20

**Colors: Black (BL) and White (WH)
^Rack Units: 3 RU, 6 RU, and 9 RU
^^Ports: 24 and 48

TAA Compliant

Some Part Numbers Compliant with the U.S. Trade Agreements Act (TAA) for purchases shipped to the United States. Inquire further at panduit.com.

PanZone® TrueEdge Vertical Wall Mount Enclosure

ENGINEERING DRAWINGS

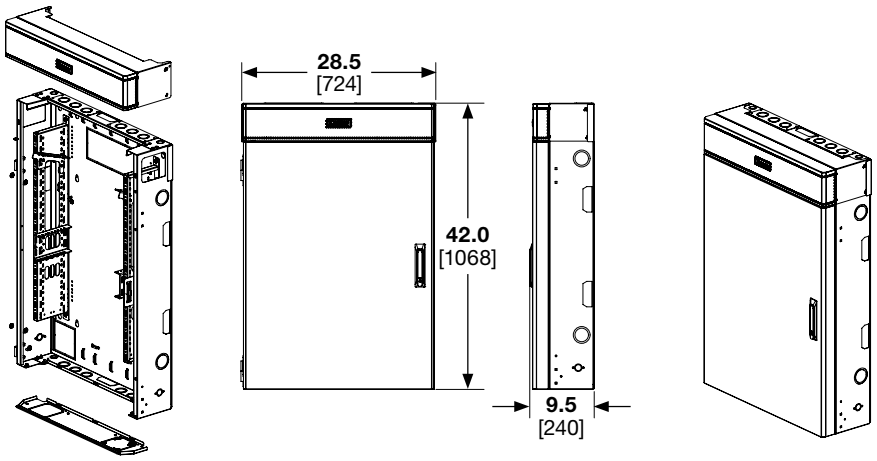

WME3BL

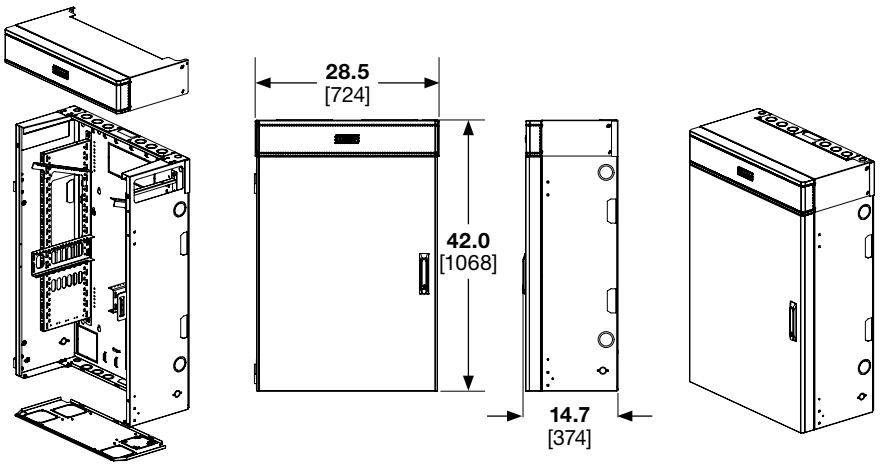

WME6BL

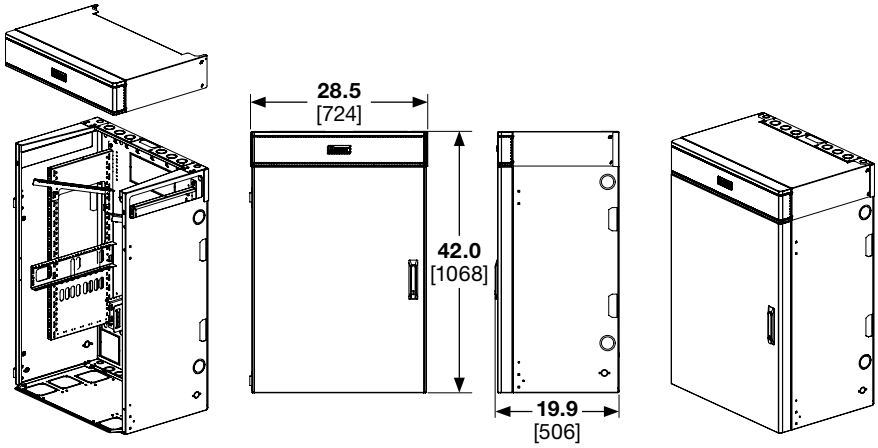

WME9BL

Dimensions are in inches. [Dimensions in brackets are metric].

WORLDWIDE SUBSIDIARIES AND SALES OFFICES

PANDUIT US/CANADA
Phone: 800.777.3300

PANDUIT EUROPE LTD.
London, UK
Phone: 44.20.8601.7200

PANDUIT SINGAPORE PTE. LTD.
Republic of Singapore
Phone: 65.6305.7575

PANDUIT JAPAN
Tokyo, Japan
Phone: 81.3.6863.6000

PANDUIT LATIN AMERICA
Guadalajara, Mexico
Phone: 52.33.3777.6000

PANDUIT AUSTRALIA PTY. LTD.
Victoria, Australia
Phone: 61.3.9794.9020

For a copy of Panduit product warranties, log on to www.panduit.com/warranty

For more information
Visit us at www.panduit.com
Contact Customer Service by email: cs@panduit.com
or by phone: 800.777.3300

© 2024 Panduit Corp.
ALL RIGHTS RESERVED.

RKSP211-WW-ENG
6/2024