BALDOR
A MEMBER OF THE ABB GROUP

BALDOR • RELIANCE

Product Information Packet

KENM3534

.33HP,1750RPM,3PH,60HZ,56C,3513M,TENV,F1

Copyright © All product information within this document is subject to Baldor Electric Company copyright © protection, unless otherwise noted.

Part Detail							
Revision:	F	**Status:**	PRD/A	**Change #:**		**Proprietary:**	No
Type:	AC	**Prod. Type:**	3512M	**Elec. Spec:**	35WGN563	**CD Diagram:**	CD0005
Enclosure:	TENV	**Mfg Plant:**		**Mech. Spec:**	35E010	**Layout:**	35LYE010
Frame:	56C	**Mounting:**	F1	**Poles:**	04	**Created Date:**	09-17-2012
Base:	N	**Rotation:**	R	**Insulation:**	F	**Eff. Date:**	09-14-2016
Leads:	9#18					**Replaced By:**	
Literature:		**Elec. Diagram:**					

BALDOR A MEMBER OF THE ABB GROUP

Nameplate NP2116L

CAT.NO.	KENM3534						
SPEC.	35E010N563G1						
HP	.33						
VOLTS	230/460						
AMP	1.1/.55						
RPM	1750						
FRAME	56C	**HZ**	60	**PH**	3		
SER.F.	1.15	**CODE**	M	**DES**	B	**CL**	F
NEMA-NOM-EFF	80	**PF**	70				
RATING	40C AMB-CONT						
CC				**USABLE AT 208V**			
DE	6205	**ODE**	6203				
ENCL	TENV	**SN**					

BALDOR A MEMBER OF THE ABB GROUP

AC Induction Motor Performance Data

Record # 39804 - Typical performance - not guaranteed values

Winding: 35WGN563-R003	**Type:** 3512M	**Enclosure:** TENV

Nameplate Data				460 V, 60 Hz: High Voltage Connection	
Rated Output (HP)	.33			Full Load Torque	1 LB-FT
Volts	230/460			Start Configuration	direct on line
Full Load Amps	1.1/.55			Breakdown Torque	5.04 LB-FT
R.P.M.	1750			Pull-up Torque	2.28 LB-FT
Hz	60	Phase	3	Locked-rotor Torque	3.29 LB-FT
NEMA Design Code	B	KVA Code	M	Starting Current	4.2 A
Service Factor (S.F.)	1.15			No-load Current	0.375 A
NEMA Nom. Eff.	80	Power Factor	70	Line-line Res. @ 25ºC	51.2 Ω
Rating - Duty	40C AMB-CONT			Temp. Rise @ Rated Load	37°C
S.F. Amps				Temp. Rise @ S.F. Load	43°C
				Locked-rotor Power Factor	68
				Rotor inertia	0.0709 LB-FT2

Load Characteristics 460 V, 60 Hz, 0.33 HP

% of Rated Load	25	50	75	100	125	150	S.F.
Power Factor	30	47	61	71	78	81	74
Efficiency	66.6	77.8	81.3	82.3	82.3	81.2	80.3
Speed	1785	1772	1758	1744	1728	1710	1745
Line amperes	0.39	0.422	0.474	0.534	0.607	0.702	0.6

BALDOR A MEMBER OF THE ABB GROUP

Performance Graph at 460V, 60Hz, 0.33HP Typical performance - Not guaranteed values

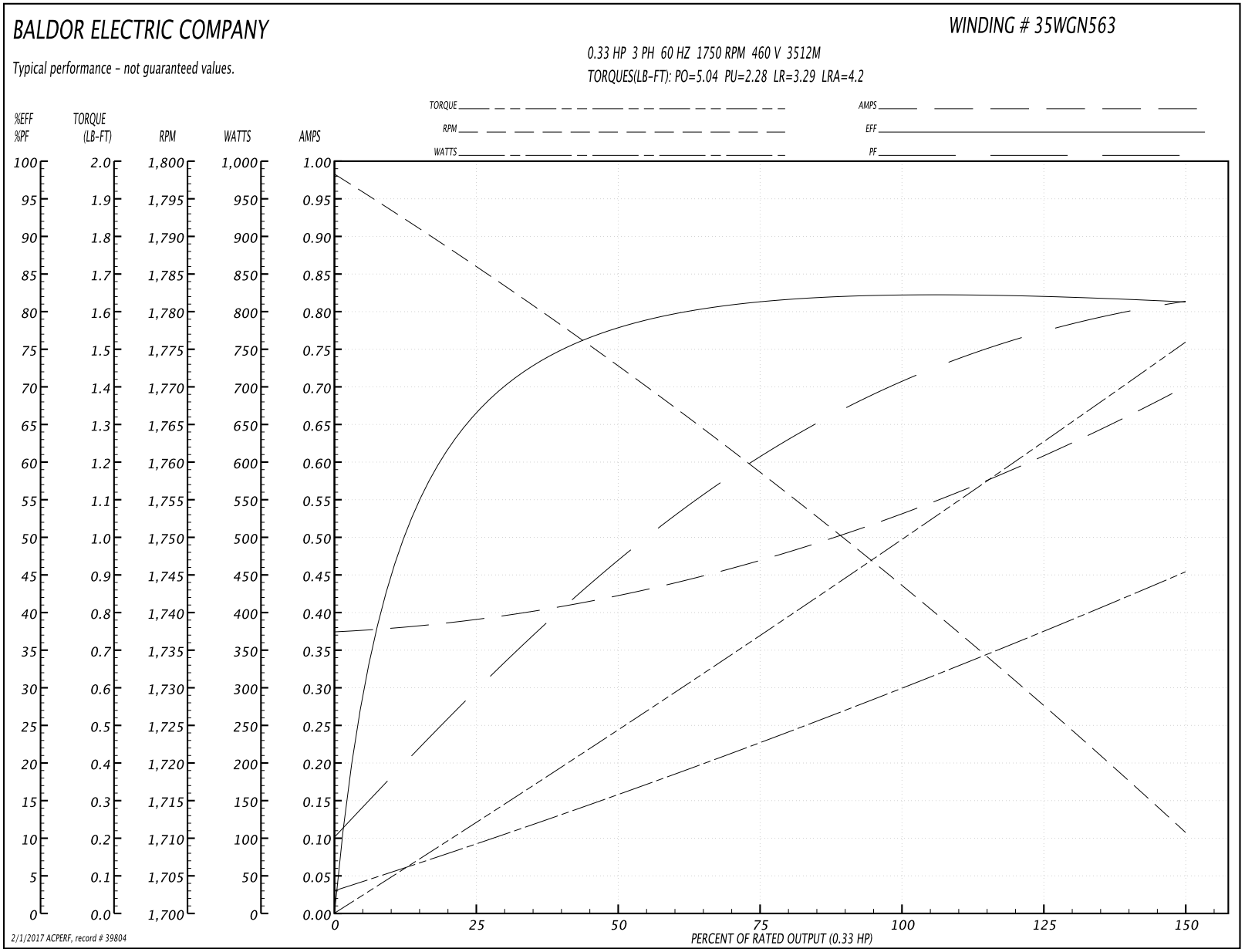

BALDOR
A MEMBER OF THE ABB GROUP

35LYE010

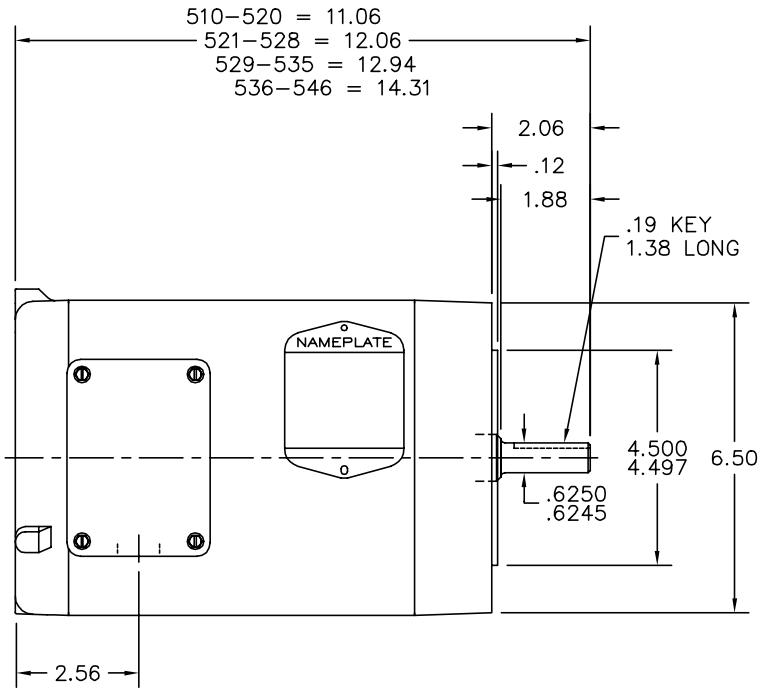

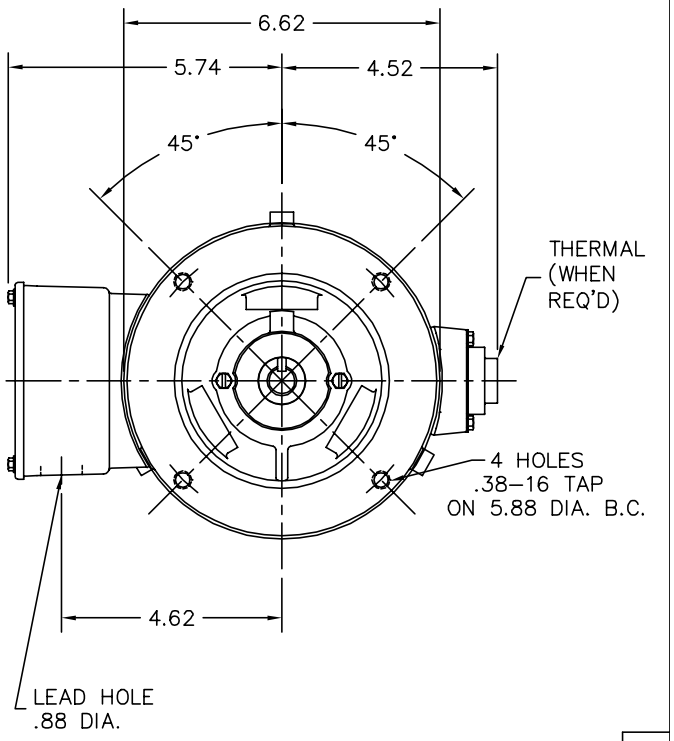

35LYE010

CUSTOMER IS RESPONSIBLE FOR DETERMINING THAT BALDOR'S PRODUCT WILL PERFORM SUITABLY IN THE INTENDED APPLICATION.

REV. DESC: UPDATE KOLD GRAPHICS			BALDOR • DODGE • RELIANCE
REV. LTR: H	VERSION: 04	TDR: 000000486011	
FILE: \AAA\00027\338		REVISED: 14:58:02 12/31/2008	STD VERT 56C TENV 35M
MTL: –		BY: ENCHEB0	SH 1 of 1

BALDOR A MEMBER OF THE ABB GROUP

CD0005

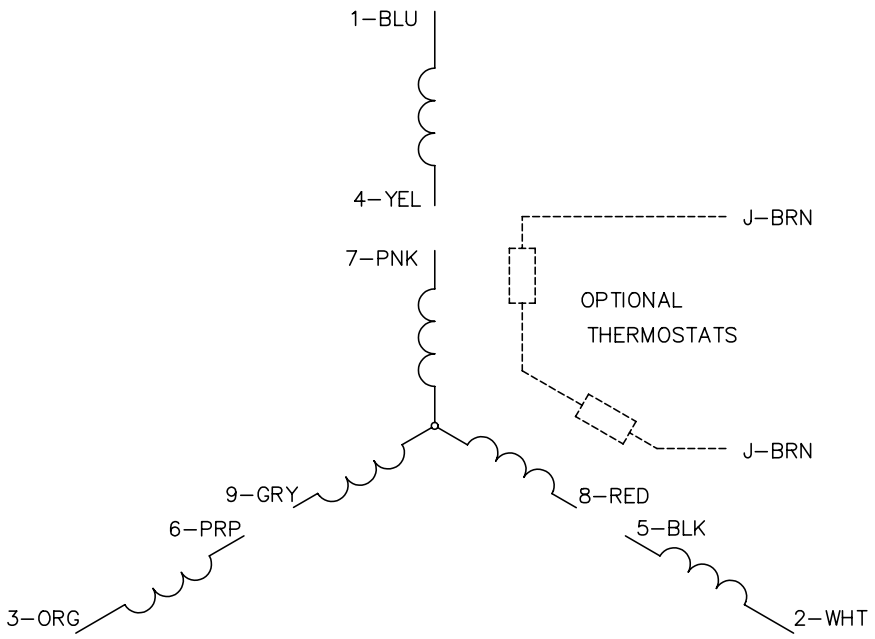

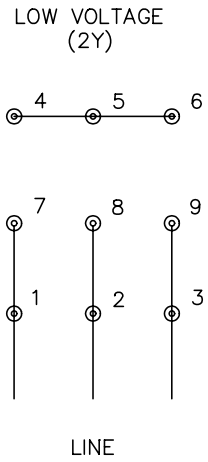

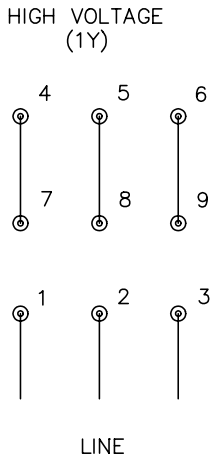

NOTES:

1. INTERCHANGE ANY TWO LINE LEADS TO REVERSE ROTATION.
2. OPTIONAL THERMOSTATS ARE PROVIDED WHEN SPECIFIED.
3. ACTUAL NUMBER OF INTERNAL PARALLEL CIRCUITS MAY BE A MULTIPLE OF THOSE SHOWN ABOVE.
4. LEAD COLORS ARE OPTIONAL. LEADS MUST ALWAYS BE NUMBERED AS SHOWN.

CD0005

REV. DESC: REVISE TO SHOW OPTIONAL COLORS			BALDOR ELECTRIC Co.
REV. LTR: E	BY: JLP	REVISED: 01/19/99 10:15	TDR: 0171435
CD0005		FILE: AAA00005140	MDL: –
		MTL: –	3PH, DV, 9 LEADS

BALDOR A MEMBER OF THE ABB GROUP