Floor Boxes
Accessories
Covers

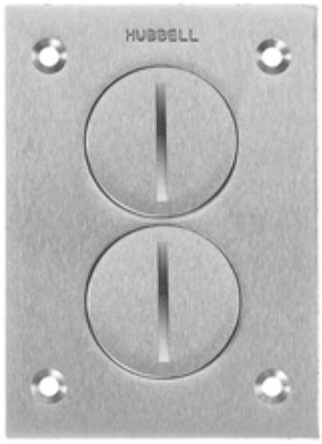

Ordering Information

Description	Material	UPC	Catalog Number
One cover required per	Aluminum	783585133201	SA3625

Specifications

Cover Style	Rectangular
Cover Finish	Aluminum
Cover Opening	Duplex Screw
Dimensions	4.15" x 2.99"

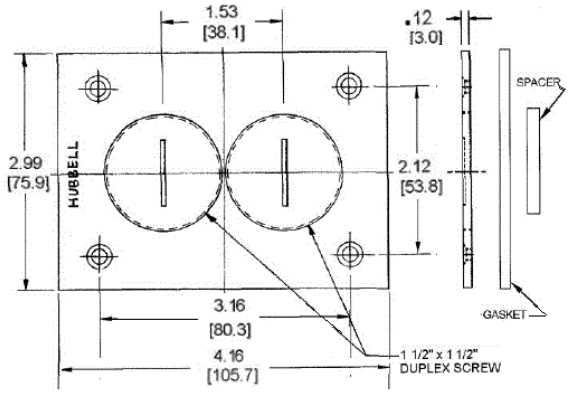

Online Resources

Customer Use Drawing
eCatalog
Installation Instructions

Dimensions in Inches (mm)

Wiring Device-Kellems