BALDOR • RELIANCE

Product Information Packet

VEM3561

3HP,1760RPM,3PH,60HZ,56C,3632M,TEFC,F1,N

Copyright © All product information within this document is subject to ABB Motors and Mechanical Inc. copyright © protection, unless otherwise noted.

Part Detail

Revision:	G	**Status:**	PRD/A	**Change #:**		**Proprietary:**	No
Type:	AC	**Elec. Spec:**	36WGS266	**CD Diagram:**	CD0005	**Mfg Plant:**	
Mech. Spec:	36J035	**Layout:**	36LYJ035	**Poles:**	04	**Created Date:**	04-30-2015
Base:	N	**Eff. Date:**	07-19-2017	**Leads:**	9#16		

Specs

Catalog Number:	VEM3561	**Heater Indicator:**	No Heater
Enclosure:	TEFC	**Insulation Class:**	F
Frame:	56C	**Inverter Code:**	Inverter Ready
Frame Material:	Steel	**KVA Code:**	K
Output @ Frequency:	3.000 HP @ 60 HZ	**Lifting Lugs:**	No Lifting Lugs
Synchronous Speed @ Frequency:	1800 RPM @ 60 HZ	**Locked Bearing Indicator:**	Locked Bearing
Voltage @ Frequency:	460.0 V @ 60 HZ	**Motor Lead Quantity/Wire Size:**	9 @ 16 AWG
	230.0 V @ 60 HZ	**Motor Lead Exit:**	Ko Box
XP Class and Group:	None	**Motor Lead Termination:**	Flying Leads
XP Division:	Not Applicable	**Motor Type:**	3632M
Agency Approvals:	UR	**Mounting Arrangement:**	F1
	CSA EEV	**Power Factor:**	75
	CSA	**Product Family:**	General Purpose
Auxillary Box:	No Auxillary Box	**Pulley End Bearing Type:**	Ball
Auxillary Box Lead Termination:	None	**Pulley Face Code:**	C-Face
Base Indicator:	No Mounting	**Pulley Shaft Indicator:**	Standard
Bearing Grease Type:	Polyrex EM (-20F +300F)	**Rodent Screen:**	None
Blower:	None	**Shaft Extension Location:**	Pulley End

Current @ Voltage:	4.200 A @ 460.0 V
	8.400 A @ 230.0 V
	9.000 A @ 208.0 V
Design Code:	B
Drip Cover:	No Drip Cover
Duty Rating:	CONT
Electrically Isolated Bearing:	Not Electrically Isolated
Feedback Device:	NO FEEDBACK
Front Face Code:	Standard
Front Shaft Indicator:	None

Shaft Ground Indicator:	No Shaft Grounding
Shaft Rotation:	Reversible
Shaft Slinger Indicator:	No Slinger
Speed Code:	Single Speed
Motor Standards:	NEMA
Starting Method:	Direct on line
Thermal Device - Bearing:	NONE (OLD)
Thermal Device - Winding:	None
Vibration Sensor Indicator:	No Vibration Sensor
Winding Thermal 1:	None
Winding Thermal 2:	None

Nameplate NP3441LUA

CAT.NO.	VEM3561							
SPEC	36J035S266G3							
HP	3							
VOLTS	230/460							
AMPS	8.4/4.2							
RPM	1760							
FRAME	56C	**HZ**	60			**PH**	3	
SF	1.15	**CODE**	K	**DES**	B	**CLASS**	F	
NEMA NOM. EFF	89.5	**PF**	75					
RATING	40C AMB-CONT							
CC	010A			**USABLE AT 208V**	9			
ENCL	TEFC	**SER**						
DE	6206	**ODE**	6205					
VPWM INVERTER READY								
CT6-60H(10:1)VT3-60H(20:1								
	50Hz 3HP 190/380V 9.6/4.8A							SF1.0

Parts List

Part Number	Description	Quantity
SA300133	SA 36J035S266G3	1.000 EA
RA287179	RA 36J035S266G3	1.000 EA
36FN3000C01SP	EXFN, PLASTIC, 5.25 OD, .912 ID	1.000 EA
36CB3004	36 CB CASTING W/1.09 DIA LEAD HOLE @ 6:0	1.000 EA
36GS1000SP	GASKET-CONDUIT BOX, .06 THICK #SV-330 LE	1.000 EA
51XB1016A08	10-16X 1/2HXWSSLD SERTYB	2.000 EA
11XW1032G06	10-32 X .38, TAPTITE II, HEX WSHR SLTD U	1.000 EA
HW3001B01	BRASS CUP WASHER, FOR #10 SCREW	1.000 EA
36EP3104A01	FREP MACH ASSEMBLY FOR ROUTING	1.000 EA
HW4500A01	1641B(ALEMITE)400 UNIV, GREASE FITT	1.000 EA
HW5100A05	WVY WSHR F/205 & 304 BRGS	1.000 EA
36EP1301A01	PU ENDPLATE, MACH	1.000 EA
HW4500A01	1641B(ALEMITE)400 UNIV, GREASE FITT	1.000 EA
10XN2520A24	1/4-20X 1 1/2 HEX HD X	4.000 EA
HW1001A25	LOCKWASHER 1/4, ZINC PLT .493 OD, .255 I	4.000 EA
51XB1214A16	12-14X1.00 HXWSSLD SERTYB	1.000 EA
36FH4009A102	IEC FH GREASER PRIMED	1.000 EA
51XW1032A06	10-32 X .38, TAPTITE II, HEX WSHR SLTD S	3.000 EA
36CB4516	36 LIPPED CB LID - GALVANNEAL	1.000 EA
37GS1001SP	GASKET, CONDUIT BOX LID, .06 THICK LEXID	1.000 EA
51XW0832A07	8-32 X .44, TAPTITE II, HEX WSHR SLTD SE	4.000 EA
HW2501D13	KEY, 3/16 SQ X 1.375	1.000 EA
HA7000A04	KEY RETAINER 0.625 DIA SHAFTS	1.000 EA
85XU0407S04	4X1/4 U DRIVE PIN STAINLESS	2.000 EA

Parts List (continued)

Part Number	Description	Quantity
MJ1000A02	GREASE, POLYREX EM EXXON (USe 4824-15A)	0.050 LB
HA3101A25	THRUBOLT 1/4-20 X 11.000 OHIO ROD	4.000 EA
MG1000Y03	MUNSELL 2.53Y 6.70/ 4.60, GLOSS 20,	0.022 GA
LC0005E01	CONN.DIA./WARNING LABEL (LC0005/LB1119N)	1.000 EA
NP3441LUA	ALUM SUPER-E VPWM INV READY UL CSA-EEV C	1.000 EA
36PA1001	PKG GRP, PRINT PK1017A06	1.000 EA
PK3082	STYROFOAM CRADLE	1.000 EA
MN416A01	TAG-INSTAL-MAINT no wire (1200/bx) 5/18	1.000 EA

Performance Graph at 460V, 60Hz, 3.0HP Typical performance - Not guaranteed values

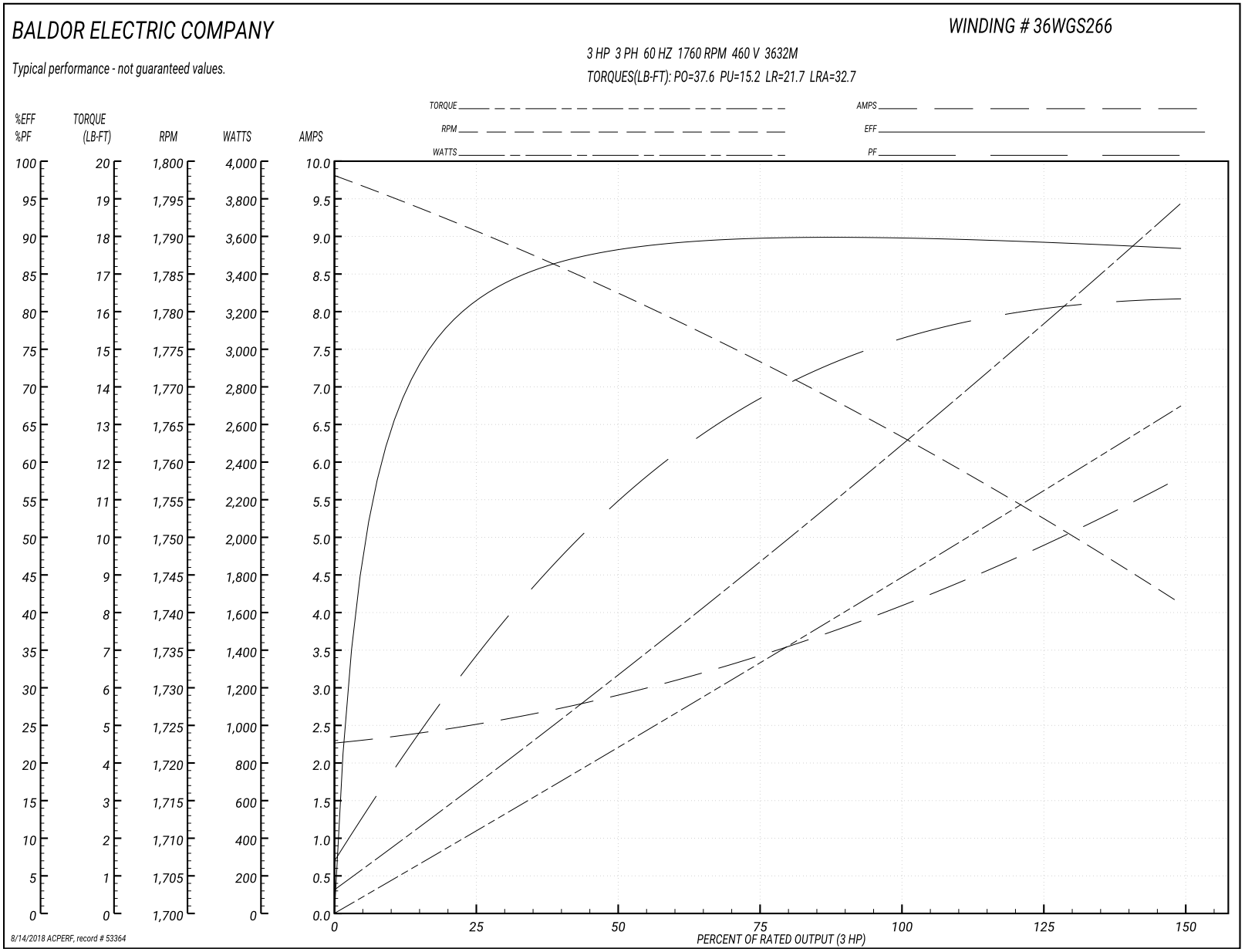

Performance Graph at 230V, 60Hz, 3.0HP Typical performance - Not guaranteed values

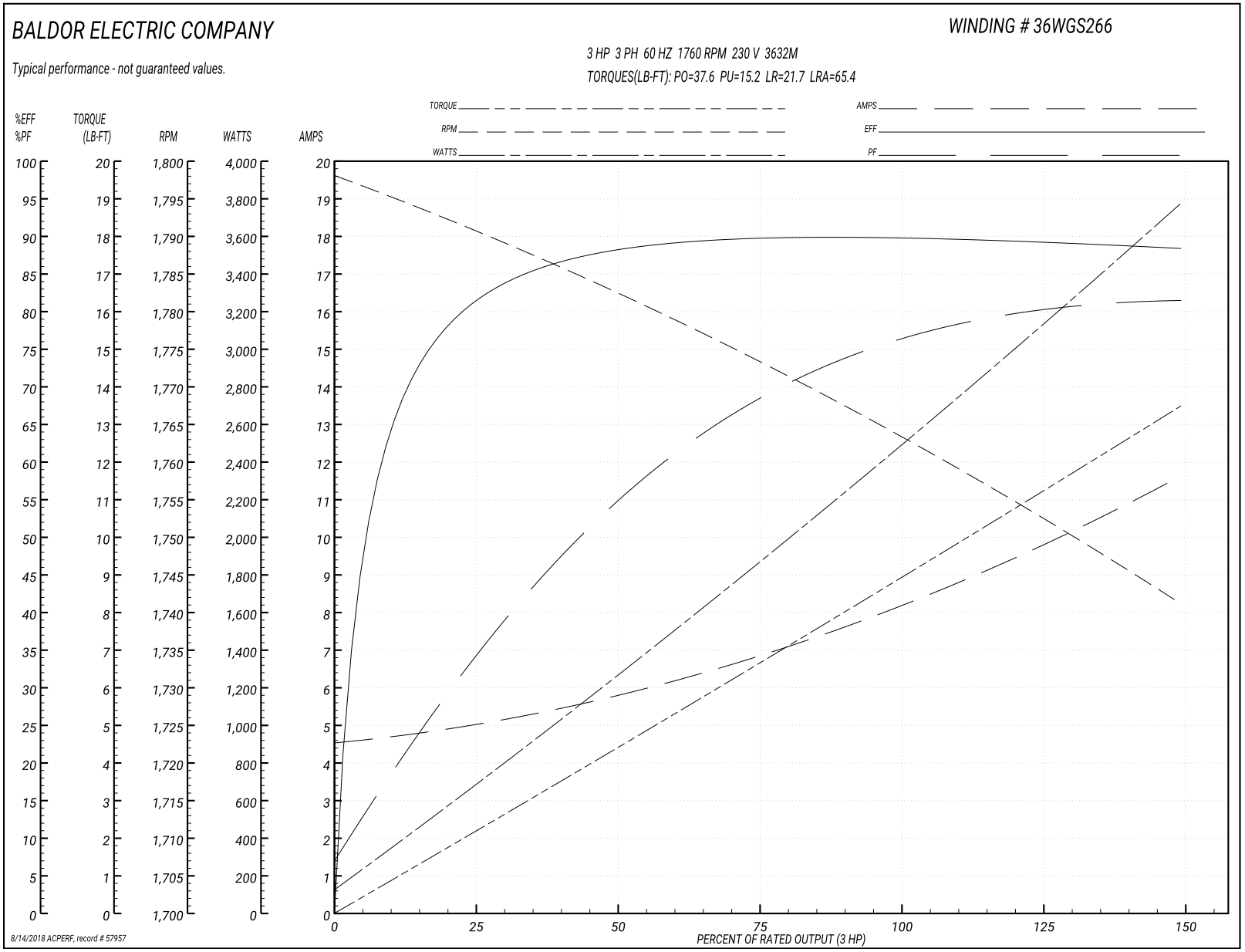

36LYJ035

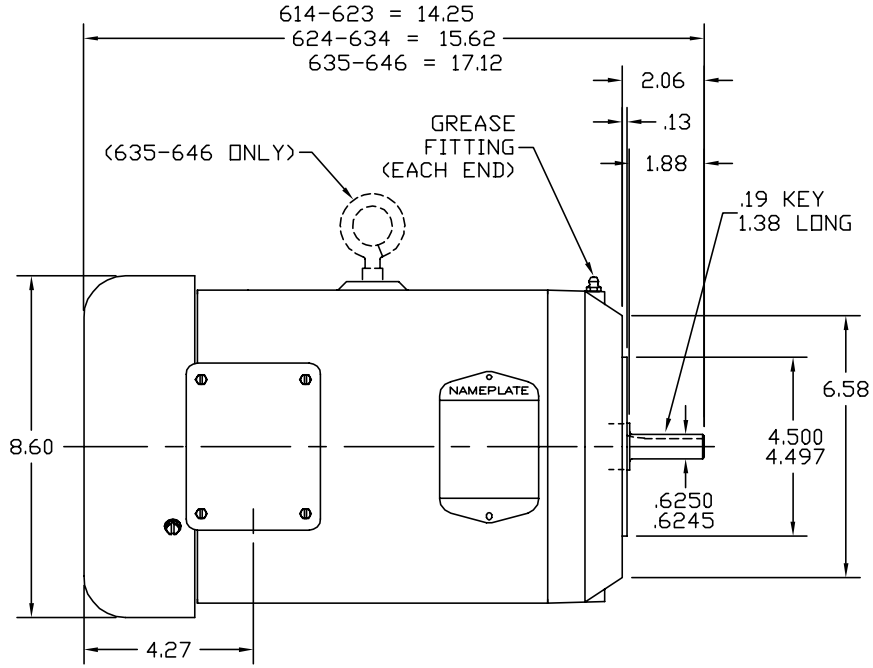

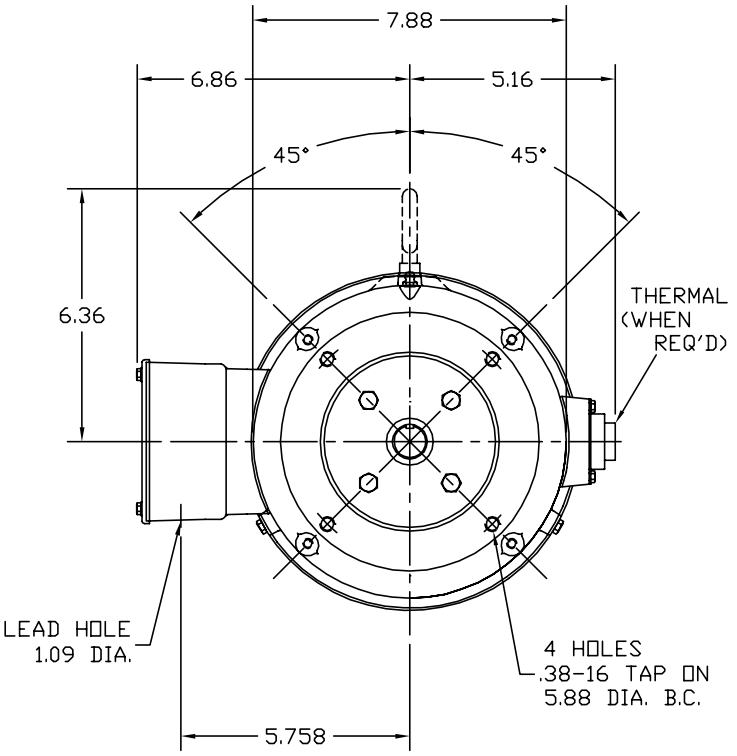

36LYJ035

CUSTOMER IS RESPONSIBLE FOR DETERMINING THAT BALDOR'S PRODUCT WILL PERFORM SUITABLY IN THE INTENDED APPLICATION.

REV. DESC: UPDATE KOBX / KOLD & DESCRIPTION		
REV. LTR: D	VERSION: 02	TDR: 000000921153
FILE: \AAA\00017\758	REVISED: 02:37:43 04/29/2015	BY: ENBRAM0
MTL: –		

BALDOR

STD VERT 56C TEFC 36M

SH 1 of 1

CD0005

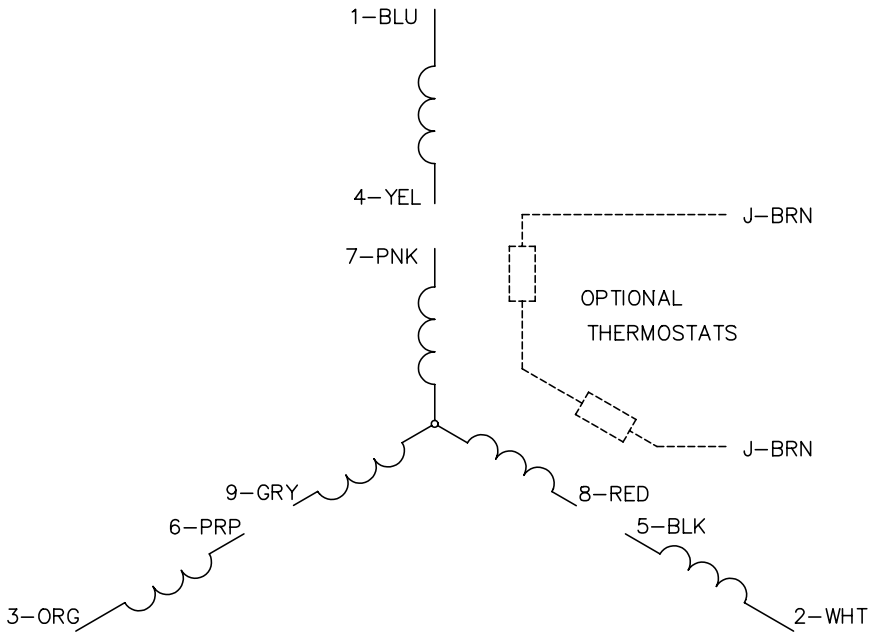

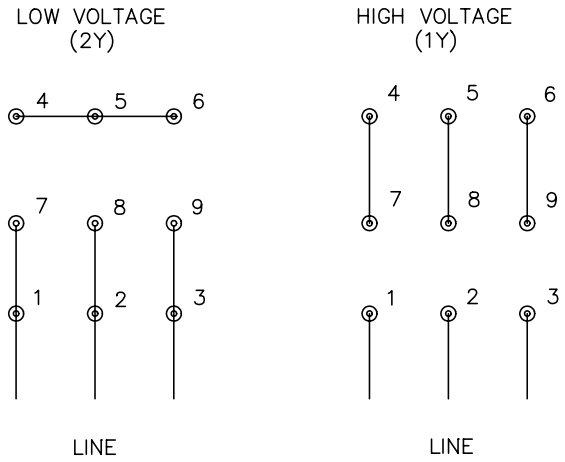

NOTES:

1. INTERCHANGE ANY TWO LINE LEADS TO REVERSE ROTATION.
2. OPTIONAL THERMOSTATS ARE PROVIDED WHEN SPECIFIED.
3. ACTUAL NUMBER OF INTERNAL PARALLEL CIRCUITS MAY BE A MULTIPLE OF THOSE SHOWN ABOVE.
4. LEAD COLORS ARE OPTIONAL. LEADS MUST ALWAYS BE NUMBERED AS SHOWN.

CD0005

REV. DESC: REVISE TO SHOW OPTIONAL COLORS			BALDOR ELECTRIC Co.
REV. LTR: E	BY: JLP	REVISED: 01/19/99 10:15	TDR: 0171435
CD0005		FILE: AAA00005140	MDL: –
		MTL: –	3PH, DV, 9 LEADS