Product Overview

The PowerFlexfi 520-Series AC drive delivers an innovative design that is remarkably versatile and can accommodate systems ranging from standalone machines to simple system integration. The PowerFlex 523 drive provides general control for applications ranging up to 30 HP and 22 kW. The PowerFlex 525 drive provides maximum flexibility and performance ranging up to 30 HP and 22 kW.

By combining a variety of motor control options, communications, energy savings and standard safety features in a effective drive, the PowerFlex 520-Series drive is suitable for a wide array of applications.

Maximize your system performance and productivity by taking advantage of the following key features offered in a PowerFlex 520-Series drive.

PowerFlex 520-Series AC Drives Feature

Modular Design

- Detachable control module and power module allow simultaneous configuration and installation.
- Each drive has a standard control module used across the entire power range.
- MainsFree' configuration allows you to simply connect your control module to a PC with a standard USB cable and quickly upload, download, and flash the drive with new settings.
- Support for accessory cards without affecting footprint.
  (PowerFlex 523 drives support one, PowerFlex 525 drives support two)

Packaging and Mounting

- Installation can be quick and easy using the DIN rail mounting feature on A, B, and C frame drives. Panel mounting is also available, providing added flexibility.
- Zero Stacking is allowed for ambient temperatures up to 45 °C, saving valuable panel space.
- Integral filtering is available on all 200V and 400V ratings, providing a cost-effective means of meeting EN61800-3 Category C2 and C3 EMC requirements. External filters provide compliance to EN61800-3 Category C1, C2, and C3 EMC requirements for all PowerFlex 520-Series ratings.
- An optional IP 30, NEMA/UL Type 1 conduit box is easily adapted to the standard IP 20 (NEMA Type Open) product, providing increased environmental ratings.

Optimized Performance

- Removable MOV to ground provides trouble-free operation when used on ungrounded distribution systems.
- A relay pre-charge limits inrush current.
- Integral brake transistor, available on all ratings, provides dynamic braking capability with simple low cost brake resistors.
- A jumper to switch between 24V DC sink or source control for control wiring flexibility.
- Dual Overload Rating available for drives above 15 HP/11 kW. Normal duty: 110% overload for 60 seconds or 150% for 3 seconds. Heavy duty: 150% overload for 60 seconds or 180% overload (200% programmable) for 3 seconds provides robust overload protection.
- Adjustable PWM frequency up to 16 kHz ensures quiet operation.

PowerFlex 520-Series AC Drive Advanced Features

Control Performance

- Variety of motor control options, including:
  - Volts per hertz (V/Hz)
  - Sensorless Vector Control (SVC)
  - Closed loop velocity vector control (PowerFlex 525 drives only)
  - Permanent Magnet motor control (PowerFlex 525 drives only)
- Variety of Positioning Control, including:
  - PointStop stops motor load in a consistent position without encoder feedback
  - Closed loop feedback with an optional encoder card (PowerFlex 525 drives only)
  - Point-to-point positioning mode (PowerFlex 525 drives only)
- Integral PIDfunctionality enhances application flexibility (PowerFlex 523 drives have one PID loop, PowerFlex 525 drives have two PID loops)

I/O Wiring

PowerFlex 523

- One (1) Analog Input (unipolar voltage or current) independently isolated from the rest of the drive I/O.
- Five (5) Digital Inputs (four programmable) provide application versatility.
- One (1) Analog Output[1] which is jumper selectable between either 0-10V or 0-20 mA. This scalable, 10-bit output is suitable for metering or as a speed reference to another device.
- One (1) Relay Output (form C) can be used to indicate various drive, motor or logic conditions.

[1] Analog output terminal 15 is only available on PowerFlex 520 series drive and requires firmware 001 and later to configure the analog output parameters.

PowerFlex 523 Series B Control I/O Wiring Block Diagram

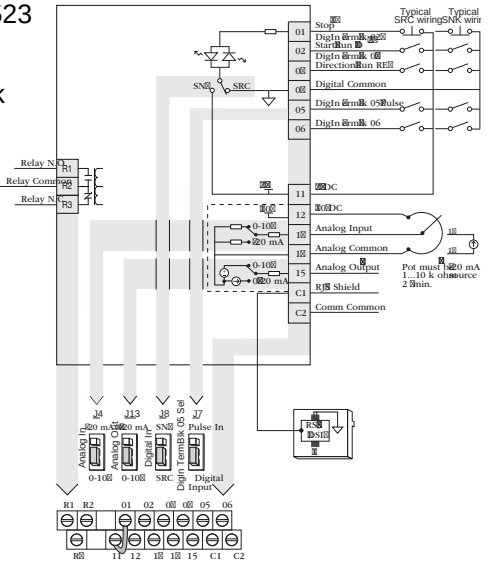

PowerFlex 525

- Two (2) Analog Inputs (one unipolar and one bipolar) are independently isolated from the rest of the drive I/O. These inputs can be toggled via a digital input.
- Seven (7) Digital Inputs (six programmable) provide application versatility.
- One (1) Analog Output which is jumper selectable between either 0-10V or 0-20 mA. This scalable, 10-bit output is suitable for metering or as a speed reference to another drive.
- Two (2) Opto Outputs and two (2) Relay Outputs (one form A and one form B) can be used to indicate various drive, motor or logic conditions.

PowerFlex 525 Control I/O Wiring Block Diagram

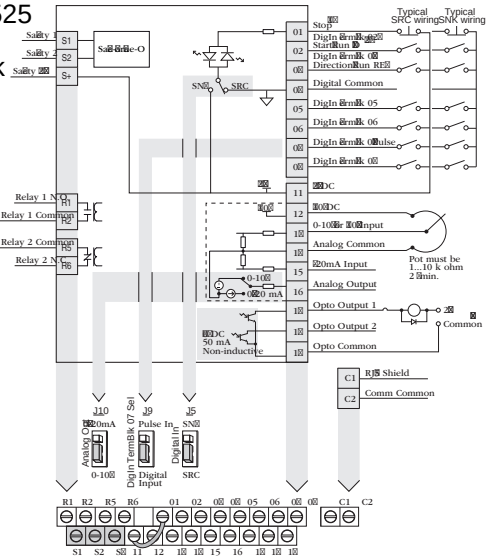

PARAMETERS

No.	Name	Description
01	Adapter Cfg	Sets the operation of the serial converter (Auto, Master, Slave, RTU Master, and RTU Pass-thru).
02	DF1 Addr Cfg	Configures the DF1 address used for the serial converter.
03	DF1 Rate Cfg	Configures the data rate used for the serial port.
04	Comm Flt Action	Sets the action that the module will take if it detects that communications have been disrupted.
05	Reset Module	Used to reset the adapter or reset defaults.
06	Clear DF1 Counts	Used to clear the DF1 statistical parameters (7-15).
07	DF1 Packets Sent	Displays the number of DF1 packets sent by the serial converter.
08	DF1 Packets Rcvd	Displays the number of DF1 packets received by the serial converter.
09	Undelivered Msgs	Displays the number of DF1 packets sent by the serial converter and not acknowledged.
10	ENQs Sent	Displays the number of ENQs sent by the serial converter.
11	ENQs Received	Displays the number of ENQs received by the serial converter.
12	NAKs Received	Displays the number of NAKs received by the serial converter.
13	NAK Bad Packet	Displays the number of NAKs received by the serial converter because of bad packets.
14	NAK No Memory	Displays the number of NAKs received by the serial converter because of insufficient buffer memory.
15	Duplicate Msgs	Displays the number of duplicate messages sent by the serial converter.
16	DF1 Addr Actual	Displays the actual DF1 address used by the serial converter.
17	DF1 Rate Actual	Displays the actual data rate used by the serial converter.

POINT-TO-POINT SYSTEM EXAMPLE

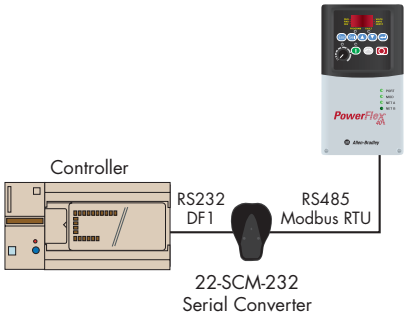

MULTIPLE-DRIVE SYSTEM EXAMPLE

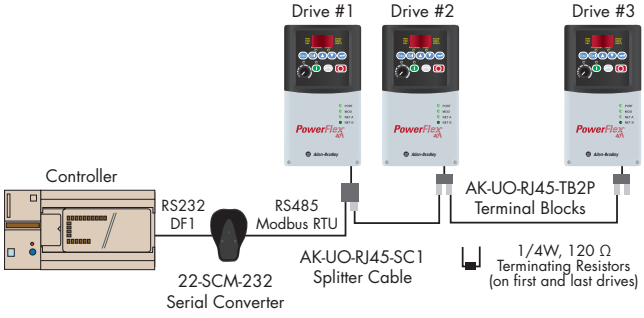

SPECIFICATIONS

Communications	Network	Protocol	NRS-232: DF1, Modbus RTU RS-485: DSI, Modbus RTU
		Data Rates	9600 – 38,400 bps
	Drive	Protocol	DSI, Modbus RTU
		Data Rates	19.2 Kbps
Electrical	Consumption	Drive (DSI)	170mA at 5V DC
		Network	N/A
Regulatory Compliance		UL	UL508C
		cUL	CAN/CSA C22.2 No. 14-M91
		CE	EN50178 and EN61800-3
		CTick	AS/NZS 2064, Group 1, Class A

DRIVEEXPLORER LITE

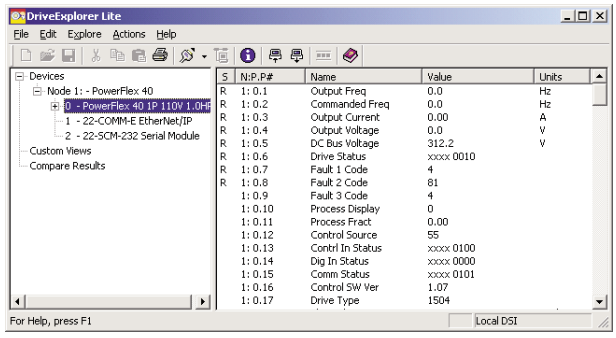

SOFTWARE TOOL CONNECTION EXAMPLE

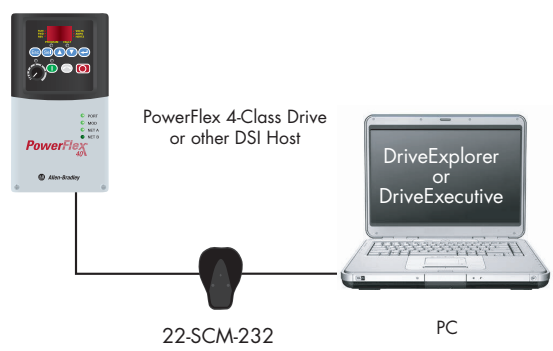

Publication 22COMM-PP001D-EN-P – July 2006
Supersedes Publication 22COMM-PP001C-EN-P – December 2005

Copyright ©2006 Rockwell Automation, Inc. All Rights Reserved. Printed in USA.

PARAMETERS

No.	Name	Description
01	Adapter Cfg	Sets the operating mode of the WIM.
02	Adapter Type	Displays the present operating mode of the WIM.
03	Drive Addr Cfg	Sets the node address of the WIM for use with the WIM operating mode set with Parameter 01 - [Adapter Cfg].
04	Drive Addr Act	Displays the node address of the drive that the WIM is communicating with when the WIM is to RTU Master mode using Parameter 01 - [Adapter Cfg].
05	Security Mode	Enables/disables the security mode for the WIM, which prevents accessing its parameters and the connected drive for configuration.
06	Security PIN	Sets the PIN number to access WIM parameters for configuration when Parameter 03 - [Security Mode] is set to 1 = PIN Required.
07	Comm Flt Action	Sets the action that the WIM and drive will take if the WIM detects that wireless communications are disrupted. This setting is effective only if I/O that controls the drive is transmitted through the WIM.
08	Reset Module	Resets the adapter or sets parameter defaults.
09	Clear DF1 Counts	Resets the DF1 statistical parameters 10 and 11 to 0 if set to "1 = Clear Counts." This parameter will be reset to "0 = Ready" after a "Clear Counts" command has been performed.
10	DF1 Packets Sent	Displays the number of DF1 packets sent by the WIM. This parameter is normally about equal to the value in parameter 11.
11	DF1 Packets Rcvd	Displays the number of DF1 packets received by the WIM. This parameter is normally about equal to the value in parameter 10.

SPECIFICATIONS

Radio		Transceiver	Bluetooth v1.1 Compliant
		Frequency	2.4 GHz Frequency Hopping
		Power	2.5 mW Maximum RF Output
		Range	Class II - 10 m (32.8 ft)
Communications	Drive	Protocol	DSI
		Data Rate	19.2 Kbps
Electrical	Consumption	Drive (DSI)	170 mA at 5 VDC
		Network	None
Regulatory Compliance		UL	UL508C
		cUL	CAN/CSA C22.2 No. 14-M91
		CE	EN50178 and EN61800-3
		CTick	AS/NZS 2064, Group 1, Class A
		FCC ID	SNT-2XWIMNX
		IC	5450A-2XWIMNX

NETWORK EXAMPLE

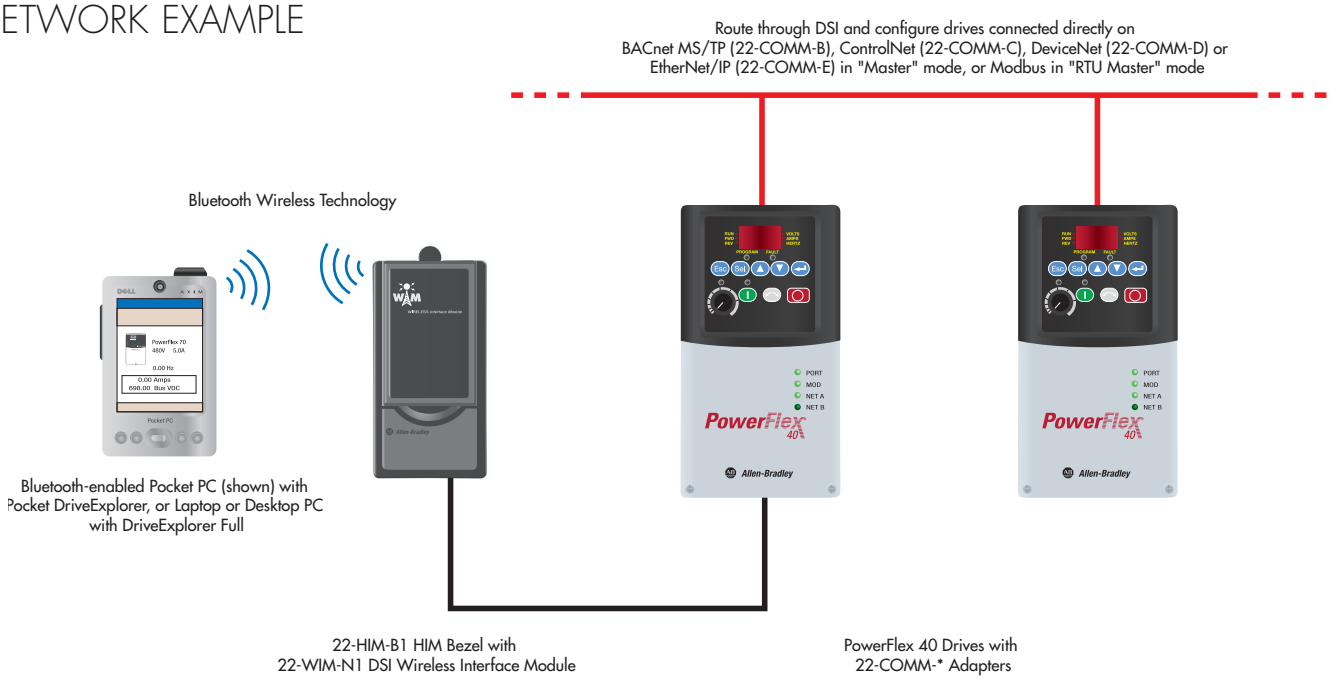

www.rockwellautomation.com

Power, Control and Information Solutions Headquarters

Americas: Rockwell Automation, 1201 South Second Street, Milwaukee, WI 53204-2496 USA, Tel: (1) 414.382.2000, Fax: (1) 414.382.4444
Europe/Middle East/Africa: Rockwell Automation, Vorstlaan/Boulevard du Souverain 36, 1170 Brussels, Belgium, Tel: (32) 2 663 0600, Fax: (32) 2 663 0640
Asia Pacific: Rockwell Automation, Level 14, Core F, Cyberport 3, 100 Cyberport Road, Hong Kong, Tel: (852) 2887 4788, Fax: (852) 2508 1846

Publication 22COMM-PP001D-EN-P – July 2006
Supersedes Publication 22COMM-PP001C-EN-P – December 2005

Copyright ©2006 Rockwell Automation, Inc. All Rights Reserved. Printed in USA.

PARAMETERS (DPI MODE)

No.	Name	Description
01	DPI Port	Displays the port on the host drive which the converter is connected.
02	Reset Module	Resets the converter or sets the converter parameters to factory default.
03	Clear DF1 Counts	Resets the DF1 statistical Parameter 04 - [DF1 Packets Sent] and Parameter 05 - [DF1 Packets Rcvd] to 0 if set to "1 = Clear Counts". This parameter will be reset to "0 = Ready" after a "Clear Counts" command has been performed.
04	DF1 Packets Sent	Displays the number of DF1 packets sent by the converter. This parameter is normally about equal to the value in Parameter 05 - [DF1 Packets Rcvd].
05	DF1 Packets Rcvd	Displays the number of DF1 packets received by the converter. This parameter is normally about equal to the value in Parameter 04 - [DF1 Packets Sent].
06	Interface Mode	Selects whether the converter will autodetect DPI or SCANport devices and use the appropriate protocol.
07	DPI Data Rate	Displays the data rate used by the DPI drive. This data rate is set in the drive, and the converter autobauds to it.
08	Ref/Fdbk Size	Displays the size of the Speed Reference/Feedback words which is determined by the drive. The converter automatically uses the correct size.
09	Datalink Size	Displays the size of each Datalink word which is determined by the drive. The converter automatically uses the correct size.

PARAMETERS (DSI MODE)

No.	Name	Description
01	Adapter	Cfg Sets the operating mode of the converter.
02	Reset Module	Resets the converter or sets the converter parameters to factory default.
03	Clear DF1 Counts	Resets the DF1 statistical Parameter 04 - [DF1 Packets Sent] and Parameter 05 - [DF1 Packets Rcvd] to 0 if set to "1 = Clear Counts". This parameter will be reset to "0 = Ready" after a "Clear Counts" command has been performed.
04	DF1 Packets Sent	Displays the number of DF1 packets sent by the converter. This parameter is normally about equal to the value in Parameter 05 - [DF1 Packets Rcvd].
05	DF1 Packets Rcvd	Displays the number of DF1 packets received by the converter. This parameter is normally about equal to the valu in Parameter 0 - [DF1 Packets Sent].
06	RTU DSI Addr Cfg	Sets the node address of the converter for use with the converter operating mode set with Parameter 01 - [Adapter Cfg].
07	RTU DSI Addr Act	Displays the node address of the drive that the converter is communicating with when the converter is set to RTU Master mode using Parameter 01 - [Adapter Cfg].
08	Adapter Type	Displays the present operating mode of the converter.

PARAMETERS (SCANport MODE)

No.	Name	Description
01	Adapter Port	Displays the port on the host drive which the converter is connected.
02	Reset Module	Resets the converter or sets the converter parameters to factory default.
03	Clear DF1 Counts	Resets the DF1 statistical Parameter 04 - [DF1 Packets Sent] and Parameter 05 - [DF1 Packets Rcvd] to 0 if set to "1 = Clear Counts". This parameter will be reset to "0 = Ready" after a "Clear Counts" command has been performed.
04	DF1 Packets Sent	Displays the number of DF1 packets sent by the converter. This parameter is normally about equal to the value in Parameter 05 - [DF1 Packets Rcvd].
05	DF1 Packets Rcvd	Displays the number of DF1 packets received by the converter. This parameter is normally about equal to the value in Parameter 04 - [DF1 Packets Sent].
06	RTU DSI Addr Cfg	Selects whether the converter will autodetect DPI or SCANport devices and use the appropriate protocol.

SPECIFICATIONS

Communications	Network	Protocol Data Rate	USB 115.2 Kbps
	Drive	Protocol Data Rate	DPI 125 or 500 Kbps DSI 19.2 Kbps SCANport 125 Kbps
Electrical	Consumption	Drive Network	DPI/SCANport 130 mA at 12 VDC DSI 170 mA at 5 VDC None
Regulatory Compliance		UL cUL CE CTick	UL508C CAN/CSA C22.2 No. 14-M91 EN50178 and EN61800-3 AS/NZS 2064, Group 1, Class A

NETWORK EXAMPLE

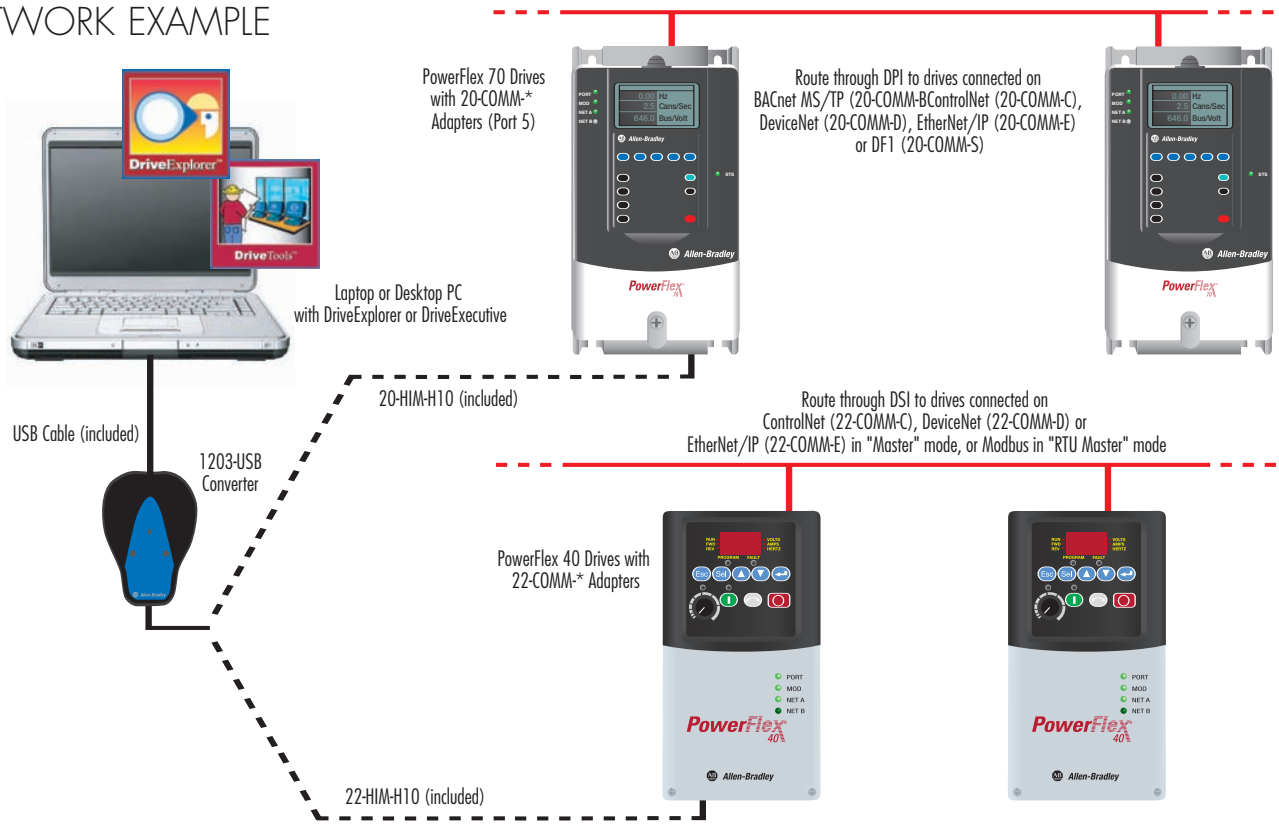

Copyright ©2006 Rockwell Automation, Inc. All Rights Reserved. Printed in USA.

4-CLASS CONNECTIVITY

		PowerFlex 4-Class		
Communication Adapter / Module	**Protocol**	**4**	**40**	**400**
(internal)	Modbus RTU	std.	std.	std.
22-COMM-B	BACnet MS/TP	Y[1]	Y	Y
22-SCM-232	DF1	Y	Y	Y
22-COMM-C	ControlNet	Y[1]	Y	Y
22-COMM-D	DeviceNet	Y[1]	Y	Y
22-COMM-E	EtherNet/IP	Y[1]	Y	Y
22-COMM-L	LonWorks	Y[1]	Y	Y
22-COMM-P	PROFIBUS DP	Y[1]	Y	Y
1769-SM2	DSI Modbus RTU	Y	Y	Y
22-WIM-Nx	Bluetooth	Y	Y	Y
1203-USB	Universal Serial Bus	Y	Y	Y

Note: [1] Requires use with either a PowerFlex 40 or 400 and installed communication adapter configured for Multi-Drive mode, or a DSI External Communications Kit.

PowerFlex is a registered trademark of Rockwell Automation. DriveExplorer, DPI, DriveExecutive, Remote I/O, and Compact I/O are trademarks of Rockwell Automation.

Trademarks not belonging to Rockwell Automation are property of their respective companies.

www.rockwellautomation.com

Power, Control and Information Solutions Headquarters

Americas: Rockwell Automation, 1201 South Second Street, Milwaukee, WI 53204-2496 USA, Tel: (1) 414.382.2000, Fax: (1) 414.382.4444
Europe/Middle East/Africa: Rockwell Automation, Vorstlaan/Boulevard du Souverain 36, 1170 Brussels, Belgium, Tel: (32) 2 663 0600, Fax: (32) 2 663 0640
Asia Pacific: Rockwell Automation, Level 14, Core F, Cyberport 3, 100 Cyberport Road, Hong Kong, Tel: (852) 2887 4788, Fax: (852) 2508 1846

Publication 22COMM-PP001D-EN-P – July 2006
Supersedes Publication 22COMM-PP001C-EN-P – December 2005

Copyright ©2006 Rockwell Automation, Inc. All Rights Reserved. Printed in USA.