# Floor Boxes
## Accessories
### Round Covers




## Ordering Information

| Description | Material | UPC | Catalog Number |
|---|---|---|---|
| Round Floor Box | Aluminum | 783585130002 | SA2725 |

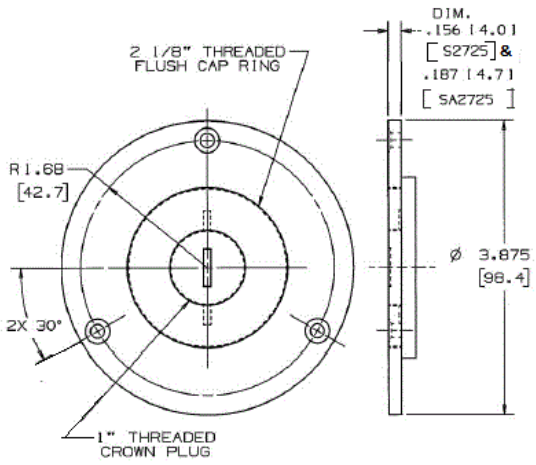


## Specifications

| | |
|---|---|
| Cover Style | Round |
| Cover Finish | Aluminum |
| Cover Opening | Combo 2 1/8" x 1" |

## Online Resources

Customer Use Drawing
eCatalog
Installation Instructions

Dimensions in Inches (mm)



Wiring Device-Kellems