BALDOR
A MEMBER OF THE ABB GROUP

BALDOR • RELIANCE

Product Information Packet

VEM3558

2HP,1755RPM,3PH,60HZ,56C,3528M,TEFC,F1,N

Copyright © All product information within this document is subject to Baldor Electric Company copyright © protection, unless otherwise noted.

Part Detail							
Revision:	J	**Status:**	PRD/A	**Change #:**		**Proprietary:**	No
Type:	AC	**Prod. Type:**	3528M	**Elec. Spec:**	35WGN909	**CD Diagram:**	CD0005
Enclosure:	TEFC	**Mfg Plant:**		**Mech. Spec:**	35J302	**Layout:**	35LYJ302
Frame:	56C	**Mounting:**	F1	**Poles:**	04	**Created Date:**	06-20-2013
Base:	N	**Rotation:**	R	**Insulation:**	F	**Eff. Date:**	01-09-2017
Leads:	9#18					**Replaced By:**	
Literature:		**Elec. Diagram:**					

BALDOR A MEMBER OF THE ABB GROUP

Nameplate NP3441LUA

CAT.NO.	VEM3558								
SPEC.	35J302N909G1								
HP	2								
VOLTS	230/460								
AMP	5.8/2.9								
RPM	1755								
FRAME	56C	**HZ**	60			**PH**	3		
SER.F.	1.15	**CODE**	L	**DES**	B	**CL**	F		
NEMA-NOM-EFF	86.5	**PF**	75						
RATING	40C AMB-CONT								
CC	010A	**USABLE AT 208V**	6.6						
DE	6205	**ODE**	6203						
ENCL	TEFC	**SN**							
VPWM INVERTER READY									
CT6-60H(10:1)VT3-60H(20:1									
	50Hz 2HP 190/380V 6.6/3.3A								SF1.0

BALDOR A MEMBER OF THE ABB GROUP

AC Induction Motor Performance Data

Record # 53344 - Typical performance - not guaranteed values

Winding: 35WGN909-R032	**Type:** 3528M	**Enclosure:** TEFC

Nameplate Data				460 V, 60 Hz: High Voltage Connection	
Rated Output (HP)	2			Full Load Torque	5.99 LB-FT
Volts	230/460			Start Configuration	direct on line
Full Load Amps	5.8/2.9			Breakdown Torque	24.9 LB-FT
R.P.M.	1755			Pull-up Torque	15.9 LB-FT
Hz	60	Phase	3	Locked-rotor Torque	17.2 LB-FT
NEMA Design Code	B	KVA Code	L	Starting Current	23.9 A
Service Factor (S.F.)	1.15			No-load Current	1.81 A
NEMA Nom. Eff.	86.5	Power Factor	75	Line-line Res. @ 25ºC	8.02 Ω
Rating - Duty	40C AMB-CONT			Temp. Rise @ Rated Load	65°C
S.F. Amps				Temp. Rise @ S.F. Load	77°C
				Locked-rotor Power Factor	52.4
				Rotor inertia	0.165 LB-FT2

Load Characteristics 460 V, 60 Hz, 2 HP

% of Rated Load	25	50	75	100	125	150	S.F.
Power Factor	33	53	66	74	80	83	78
Efficiency	75.6	84.1	86.4	86.6	85.9	84.6	86.2
Speed	1790	1779	1769	1756	1743	1728	1748
Line amperes	1.89	2.11	2.46	2.91	3.4	4	3.2

BALDOR A MEMBER OF THE ABB GROUP

Performance Graph at 460V, 60Hz, 2.0HP Typical performance - Not guaranteed values

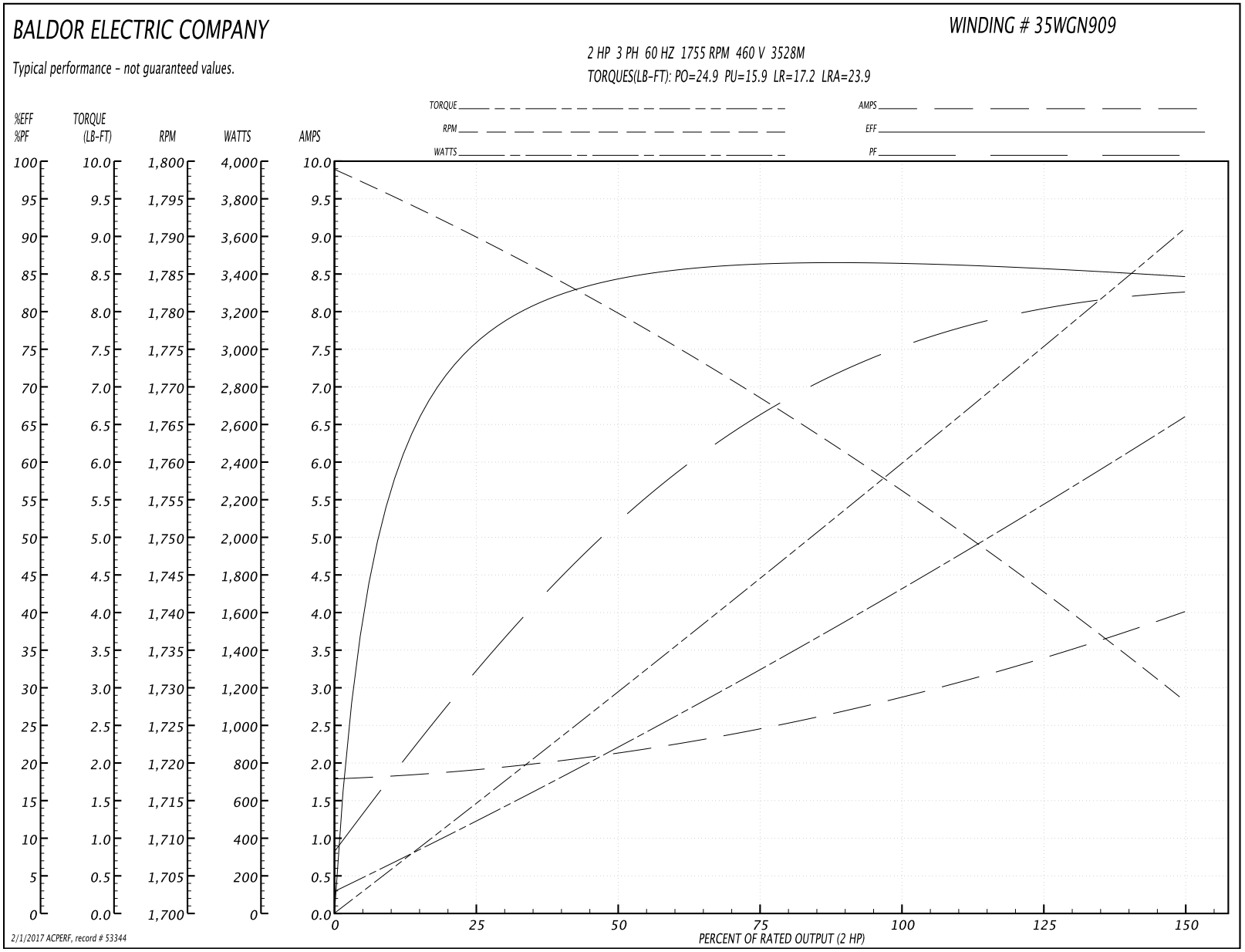

BALDOR
A MEMBER OF THE ABB GROUP

AC Induction Motor Performance Data

Record # 57956 - Typical performance - not guaranteed values

Winding: 35WGN909-R032	**Type:** 3528M	**Enclosure:** TEFC

Nameplate Data				230 V, 60 Hz: Low Voltage Connection	
Rated Output (HP)	2			Full Load Torque	5.99 LB-FT
Volts	230/460			Start Configuration	direct on line
Full Load Amps	5.8/2.9			Breakdown Torque	24.9 LB-FT
R.P.M.	1755			Pull-up Torque	15.9 LB-FT
Hz	60	Phase	3	Locked-rotor Torque	17.2 LB-FT
NEMA Design Code	B	KVA Code	L	Starting Current	47.8 A
Service Factor (S.F.)	1.15			No-load Current	3.62 A
NEMA Nom. Eff.	86.5	Power Factor	75	Line-line Res. @ 25ºC	2 Ω
Rating - Duty	40C AMB-CONT			Temp. Rise @ Rated Load	65°C
S.F. Amps				Temp. Rise @ S.F. Load	77°C
				Locked-rotor Power Factor	52.4
				Rotor inertia	0.165 LB-FT2

Load Characteristics 230 V, 60 Hz, 2 HP

% of Rated Load	25	50	75	100	125	150	S.F.
Power Factor	33	53	66	74	80	83	78
Efficiency	75.6	84.1	86.4	86.6	85.9	84.6	86.2
Speed	1790	1779	1769	1756	1743	1728	1748
Line amperes	3.78	4.22	4.92	5.82	6.8	8	6.41

BALDOR A MEMBER OF THE ABB GROUP

Performance Graph at 230V, 60Hz, 2.0HP Typical performance - Not guaranteed values

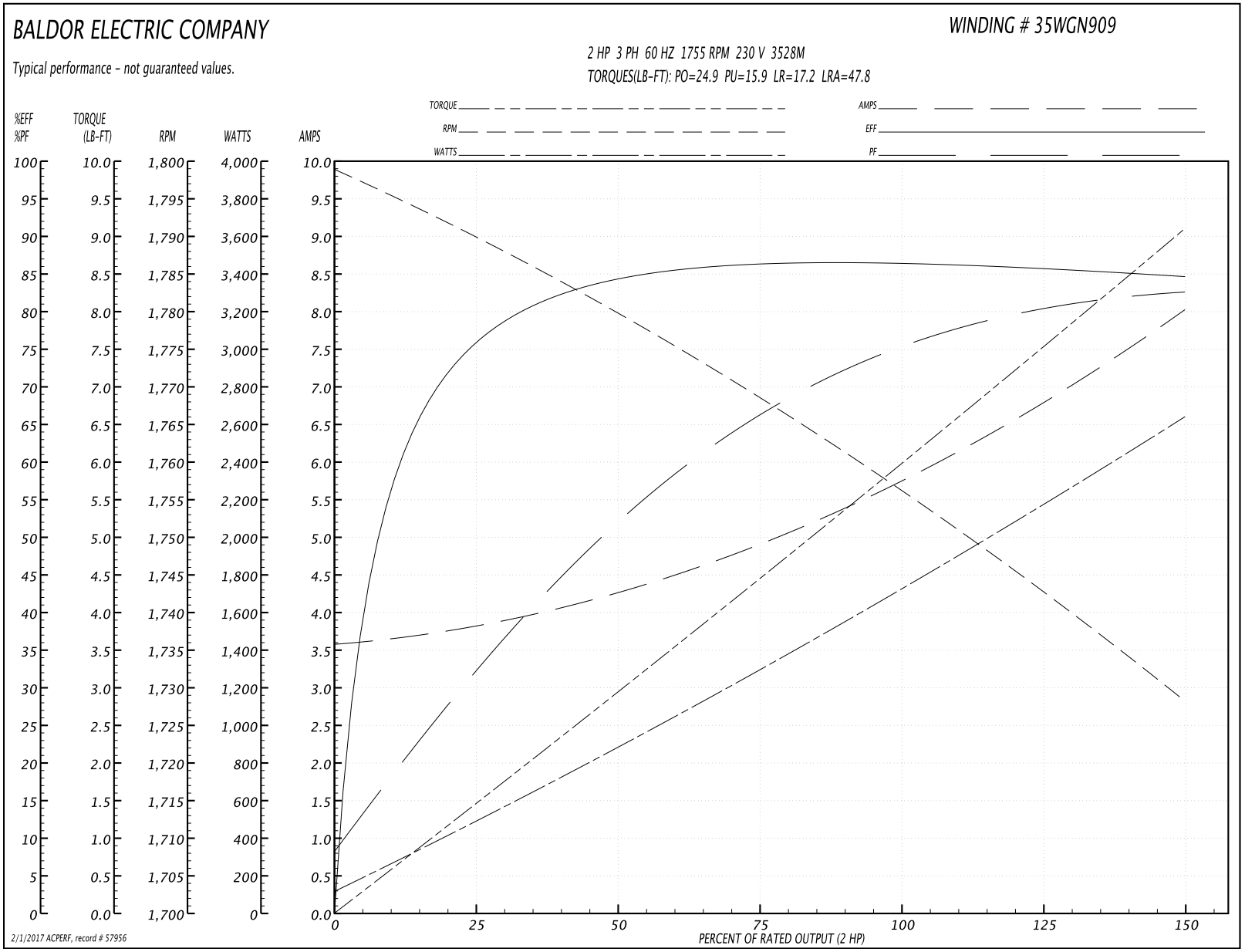

BALDOR
A MEMBER OF THE ABB GROUP

35LYJ302

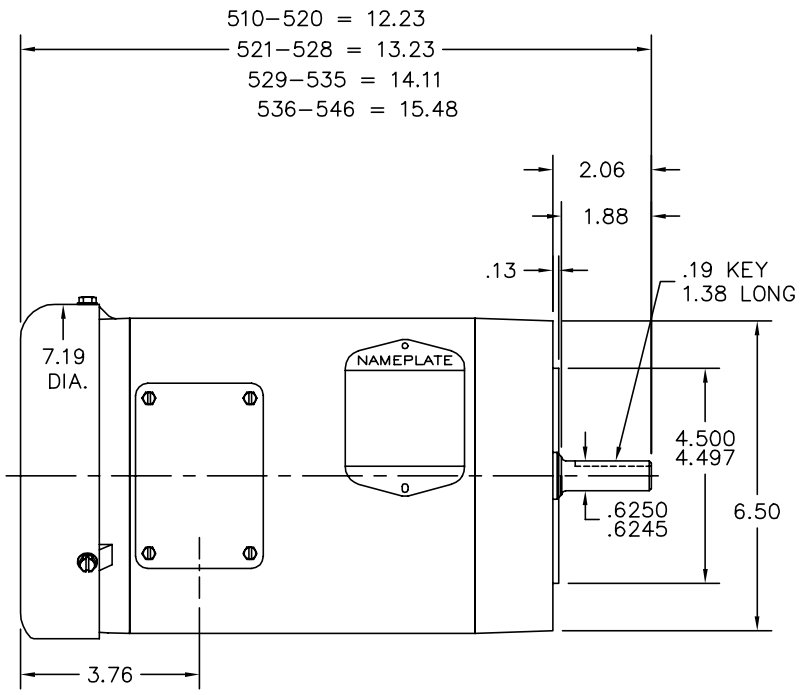

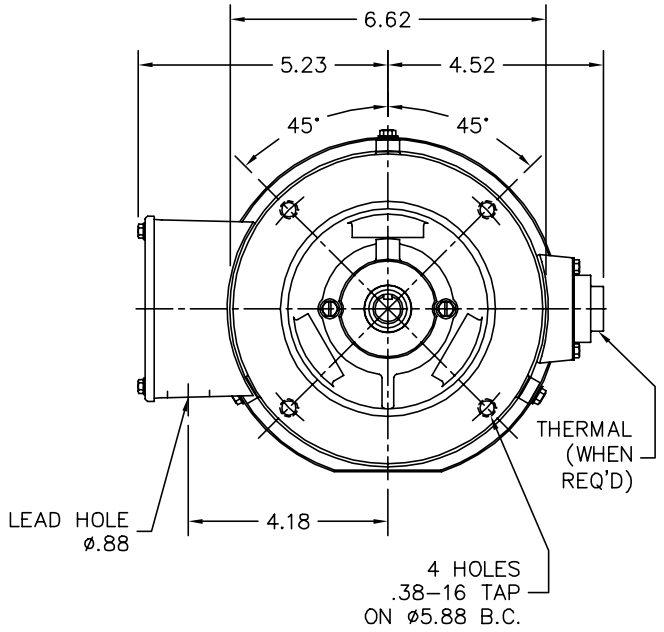

35LYJ302

CUSTOMER IS RESPONSIBLE FOR DETERMINING THAT BALDOR'S PRODUCT WILL PERFORM SUITABLY IN THE INTENDED APPLICATION.

REV. DESC: UPDATE DRWG PARTS			BALDOR
REV. LTR: C	VERSION: 02	TDR: 000000738205	
FILE: \AAA\00041\631		REVISED: 02:09:50 03/15/2012	VERT 56C TEFC 35M SUPER–E
MTL: –		BY: ENBENBO	SH 1 of 1

BALDOR
A MEMBER OF THE ABB GROUP

CD0005

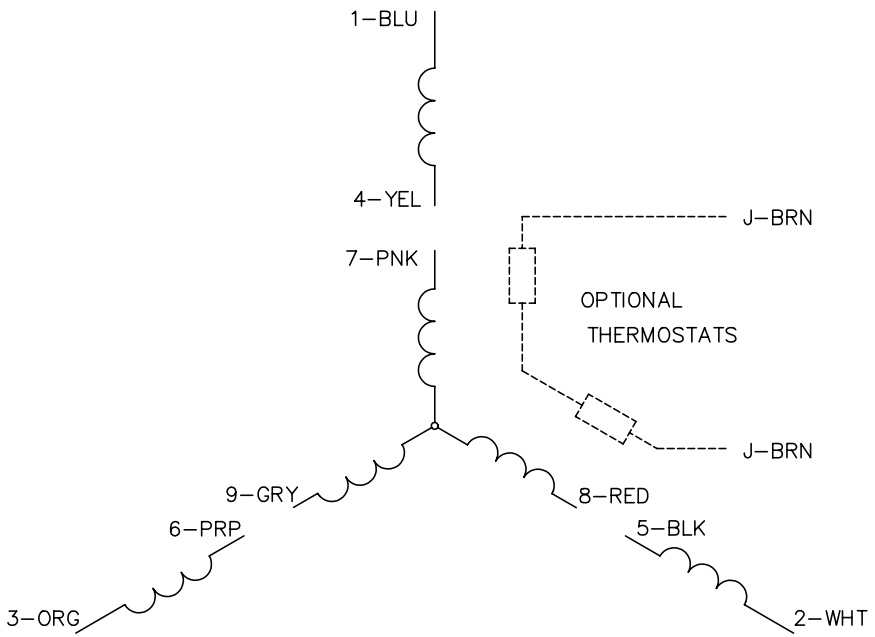

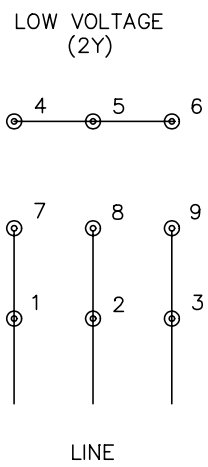

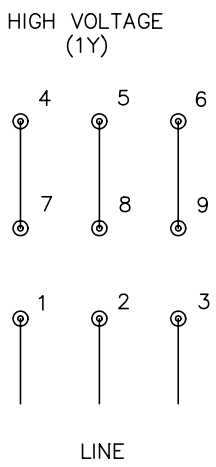

NOTES:

1. INTERCHANGE ANY TWO LINE LEADS TO REVERSE ROTATION.
2. OPTIONAL THERMOSTATS ARE PROVIDED WHEN SPECIFIED.
3. ACTUAL NUMBER OF INTERNAL PARALLEL CIRCUITS MAY BE A MULTIPLE OF THOSE SHOWN ABOVE.
4. LEAD COLORS ARE OPTIONAL. LEADS MUST ALWAYS BE NUMBERED AS SHOWN.

CD0005

REV. DESC: REVISE TO SHOW OPTIONAL COLORS			BALDOR ELECTRIC Co.
REV. LTR: E	BY: JLP	REVISED: 01/19/99 10:15	TDR: 0171435
CD0005		FILE: AAA00005140	MDL: –
		MTL: –	3PH, DV, 9 LEADS

BALDOR A MEMBER OF THE ABB GROUP