Technical Data Sheet

Oversized Clamp-On Breaker Lockout

TDS No. LOTO-39
Effective Date: 10/10/2017

Description:

Design

- Oversized 480/600V frame lockout fits breaker switches up to 2.25" wide and 7/8" thick
- Made of durable polypropylene and glass filled, impact modified nylon
- New blade design gets better grip, works on even more breaker models

Material

- Body: Polypropylene; Red (PMS 1805C)
- Slide: Glass filled nylon; Black
- Screw, blade insert: Stainless Steel

Temperature Range

- Polypropylene: -20° to 80°C (0° to 175°F)
- Glass-filled Nylon: -20° to 120°C (0° to 250°F)

Chemical Resistance

All approved chemicals listed are based on the manufactures specified chemical resistance chart for plastic material only.

Chemical	°C	Chemical	°C
Acetone	25	Petroleum	25
Acetone	60	Turpentine oil	25
Chlorine, chlorine water	25	Turpentine substitute (white spirit)	25
Fuel, engine: Gasoline (normal & premium grade)	85	Trichloroethane 1,1,1	45
Lubrication oil: gear oil	< 120	Lubricating oil: HD engine oils, hydraulic oils, transformer oils	< 120
Fuel, engine: M15 mixture (15% methanol)	70	Water (including seawater)	25
Methanol	25	Water (including seawater), chlorinated (<0,5 mg/l)	80

Dimensions

"A"	–	0.93" [23.6mm]
"B"	–	0.5" [12.7mm]
"C"	–	3.75" [95.25mm]
"D"	–	0.30" [7.63mm]
"E"	–	1.1" [28.12mm]
"F"	–	1.1" [28.12mm]

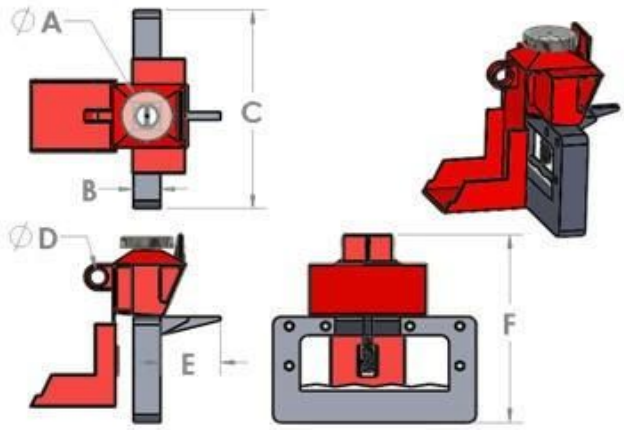

Warranty

Note: All values shown are averages and should not be used for specification purposes. Test data and test results contained in this document are for general information only and shall not be relied upon by Brady customers for designs and specifications, or be relied on as meeting specified performance criteria. Customers desiring to develop specifications or performance criteria for specific product applications should contact Brady for further information.

Product compliance information is based upon information provided by suppliers of the raw materials used by Brady to manufacture this product or based on results of testing using recognized analytical methods performed by a third party, independent laboratory. As such, Brady makes no independent representations or warranties, expressed or implied, and assumes no liability in connection with the use of this information.

Details:
MSDS Information

1. HAZARDS IDENTIFICATION

This product is NOT DANGEROUS and contains no hazardous ingredients

2. FIRST AID MEASURES/HEALTH INFORMATION PROTECTION

Eye Contact:	Not applicable, product is inert
Ingestion:	Not applicable, first aid is not normally required.
Inhalation:	Not applicable
Skin Contact:	Not applicable, product is inert, except if product is melted use gloves. For hot melted product, immerse in or flush affected area with water to dissipate heat, then obtain medical attention.
Exposure Limits:	None
Threshold Limits	None
Personal Protection:	None (ambient conditions)
NPCA-HMIS Rating:	Health: 0; Flammability: 1; Reactivity: 0
NFPA-704 Rating:	Health: 0; Flammability: 1; Reactivity: 0

3. FIRE-FIGHTING MEASURES

● Be cautious of hot melted Nylon	● Use water spray to cool fire, exposed surfaces, and to protect personnel
● Isolate product from fire	● Respiratory and eye protection is required for fire fighting personnel
● Extinguish fire with water spray	● Decomposition products under fire conditions: Oxygen-lean conditions may cause monoxide and irritating smoke

4. ACCIDENTAL RELEASE MEASURES

Land	Recover material and place in suitable container for reuse or for disposal in conformance with local regulations
Water	Recover material and place in suitable container for reuse or for disposal in conformance with local regulations.

5. HANDLING AND STORAGE

5.1 Handling	5.2 Storage
No precautions noted-see local regulation if needed	Storage pressure: Atmospheric
	Storage temperature: Ambient, no direct sunlight

6. EXPOSURE CONTROLS/PERSONAL PROTECTION

6.1 Exposure limit values	6.2 Exposure Controls
None	6.2.1 Occupational Exposure Controls
	6.2.1.1 Respiratory Protection: Not applicable
	6.2.1.2 Hand Protection: Not applicable
	6.2.1.3 Eye Protection: Not applicable
	6.2.1.4 Skin Protection: Not applicable
	6.2.2 Environmental Exposure Controls: No data available

7. PHYSICAL AND CHEMICAL PROPERTIES

General Information	
Other Information	

8. STABILITY AND REACTIVITY

8.1 Conditions to Avoid
Higher Temperatures and direct sunlight (chemical resistance is excellent)
Highly stable, but temperatures over 480 F may cause degradation
8.2 Materials to Avoid
No data available
8.3 Hazardous Decomposition Products
Under fire and oxygen-lean conditions may cause monoxide and irritating smoke

9. ECOLOGICAL INFORMATION

9.1 Ecotoxicity	No data available
9.2 Mobility	No data available
9.3 Persistence and Degradability	No data available
9.4 Bioaccumulative Potential	No data available
9.5 Other Adverse Effects	No data available

10. DISPOSAL CONSIDERATIONS

None of the materials in this product are Recyclable, dispose of all materials in accordance with an applicable federal, state, and local law.

11. TRANSPORT INFORMATION

No data available

12. REGULATORY INFORMATION

This product has been tested and validated to the Regulatory Requirements listed below.	
• OSHA 29 CFR 1910.147 ©(4)(ii)(A)(1)/(c) (5)(ii)(C)(1)	• ANSI standard Z244

13. OTHER INFORMATION

No data available

Trademarks:

Note: All values shown are averages and should not be used for specification purposes.
Test data and test results contained in this document are for general information only and shall not be relied upon by Brady customers for designs and specifications, or be relied on as meeting specified performance criteria. Customers desiring to develop specifications or performance criteria for specific product applications should contact Brady for further information.

Product compliance information is based upon information provided by suppliers of the raw materials used by Brady to manufacture this product or based on results of testing using recognized analytical methods performed by a third party, independent laboratory. As such, Brady makes no independent representations or warranties, express or implied, and assumes no liability in connection with the use of this information.

WARRANTY
Brady products are sold with the understanding that the buyers will test them in actual use and determine for themselves their adaptability to their intended uses. Brady warrants to the buyers that its products are free from defects in material and workmanship, but limits its obligation under this warranty to replacement of the product shown to Brady's satisfaction to have been defective at the time Brady sold it. This warranty does not extend to any persons obtaining the product from the buyers. This warranty is in lieu of any other warranty, express or implied, including, but not limited to, any implied warranty of merchantability or fitness for a particular purpose, and of any other obligations or liability on Brady's part. Under no circumstances will Brady be liable for any loss, damage, expense, or consequential damages of any kind arising in connection with the use, or inability to use, Brady's products.

Copyright 2019 Brady Worldwide, Inc. | All Rights Reserved
Material may not be reproduced or distributed in any form without written permission.