Floor Boxes

Hubbell SystemOne Sub-Plates

Features

- Durable cast aluminum construction, powder coat finish
- Large capacity and multi-service furniture feed applications
- Open system sub-plates permit maximum data flexibility

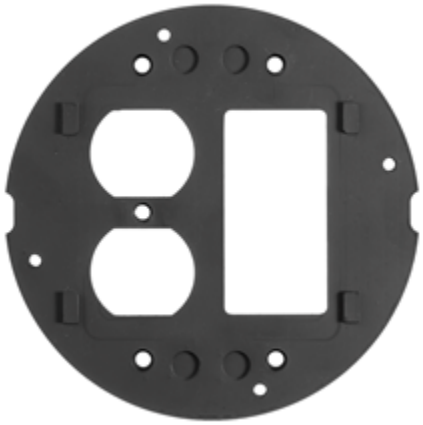

Ordering Information

Description	Device Color	UPC	Catalog Number
Duplex, Style Line®	Black	783585371757	S1SPDUSL

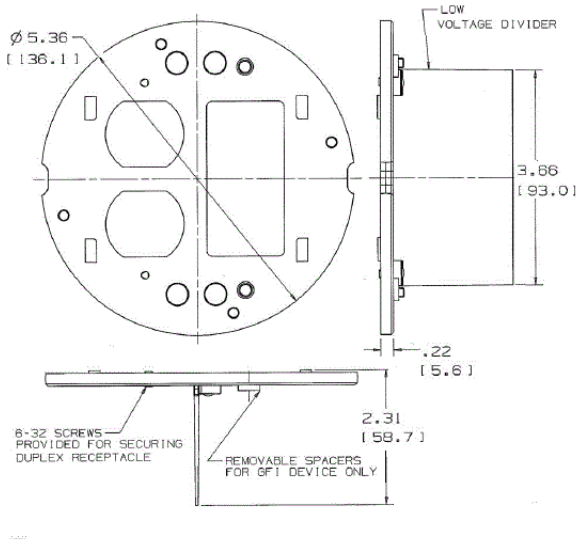

Online Resources

Customer Use Drawing
eCatalog
Installation Instructions

Dimensions in Inches (mm)

Wiring Device-Kellems