CLIMAGUARD AIR-TO-AIR OUTDOOR

TX23
Models
14 W/°F (25 W/°C)

TX33
Models
28 W/°F (50 W/°C)

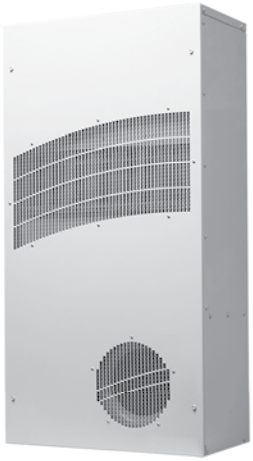

TX38
Models
56 W/°F (100 W/°C)

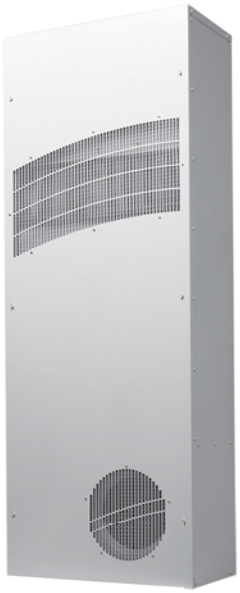

TX52
Models
83 W/°F (150 W/°C)

INDUSTRY STANDARDS

UL/cUL Listed; Type 12, 4; 4X optional; File No. SA7402
UR/cUR Recognized

UR/cUR Recognized on select models, reference performance data tables.
CE
EAC
Telcordia GR-487 capable

APPLICATION

- Telecom shelters
- Outdoor cabinets
- Equipment buildings
- Instrument enclosures
- And more

FEATURES

- Unique counterflow aluminum core for high efficiency and high performance heat transfer
- Models for 24 VDC, 48 VDC, 115 VAC and 230 VAC power supplies
- UL Listed or Recognized to save customers time and money with agency approvals
- Operating temperature range from -40 F/-40 C to 149 F/65 C
- Variable speed blowers standard on DC powered units for quiet running
- Surface or recessed mount capable
- Low-carbon mild-steel sheet-metal cover for rugged factory environments
- Easy-mount flanges for simple installation
- Mounting hardware, gaskets and user manual furnished with the unit
- Every unit functionally tested before shipping
- Filterless design for low maintenance and easy cleaning
- Engineered for temperature extremes, corrosive environments and wind driven rain

FINISH

- RAL 7035 light-gray, semi-textured powder-coat paint standard
- Stainless steel Type 304 or 316 finishes available on Type 4X models
- Other colors and textures available

OPTIONS

- Thermostat Package
- Special Voltage Package
- Outdoor Package
- Harsh Environment Package*
- Stainless Steel Package*
- Heater Package*

* Consult the factory for availability and catalog number.

Performance Data **TX23 Models 14 W/°F (25 W/°C)**

CATALOG NUMBER	TX231416100	TX231426100	TX231424100	TX231448100
COOLING PERFORMANCE				
Nominal:				
W per °F	**14**	**14**	**14**	**14**
W per °C	**25**	**25**	**25**	**25**
Refrigerant	N/A	N/A	N/A	N/A
Refrigerant Charge (ounces/grams)	N/A	N/A	N/A	N/A
Operating Temperature Range				
Maximum (°F/°C)	149/65	149/65	149/65	149/65
Minimum (°F/°C)	-40/-40	-40/-40	-40/-40	-40/-40
Airflow at 0 Static Pressure:				
Internal loop 50 Hz (CFM / m^3/hr.)	69/117	69/117	N/A	N/A
External loop 50 Hz (CFM / m^3/hr.)	58/98	58/98	N/A	N/A
Internal loop 60 Hz (CFM / m^3/hr.)	84/142	84/142	175/268	175/268
External loop 60 Hz (CFM / m^3/hr.)	69/117	69/117	158/297	158/297
ELECTRICAL DATA				
Rated Voltage	**115 VAC**	**230 VAC**	**24 VDC**	**48 VDC**
Frequency (Hz)	50/60	50/60	50/60	50/60
Operating Range	+/- 10%	+/- 10%	+/- 10%	+/- 10%
Max. Power Consumption (W at 50/60 Hz)	69	23	82	87
Max. Nominal Current (A at 50/60 Hz)	0.6	0.1	3.4	1.8
Agency Approvals	UL/cUL Listed CE EAC		UL/cUL Listed CE EAC	
Power Input Description	Terminal block	Terminal block	Terminal block	Terminal block
ENCLOSURE PROTECTION				
UL Type	Type 12, 3R, 4 standard Type 4X optional		Type 12, 3R, 4 standard Type 4X optional	
SOUND LEVEL				
At 1.5 Meters	56 dBA		56 dBA	
UNIT CONSTRUCTION				
Material	Mild steel sheet metal standard Stainless steel optional		Mild steel sheet metal standard Stainless steel optional	
Finish	RAL 7035 light-gray, semi-textured powder-coat paint standard		RAL 7035 light-gray, semi-textured powder-coat paint standard	
UNIT DIMENSIONS				
Height (in./mm)	23/584.2	23/584.2	23/584.2	23/584.2
Width (in./mm)	12/304.8	12/304.8	12/304.8	12/304.8
Depth (in./mm)	7.1/180.3	7.1/180.3	7.1/180.3	7.1/180.3
Weight (lb./kg)	30/13.6	30/13.6	30/13.6	30/13.6

TX23 DC Models 14 W/°F (25 W/°C)

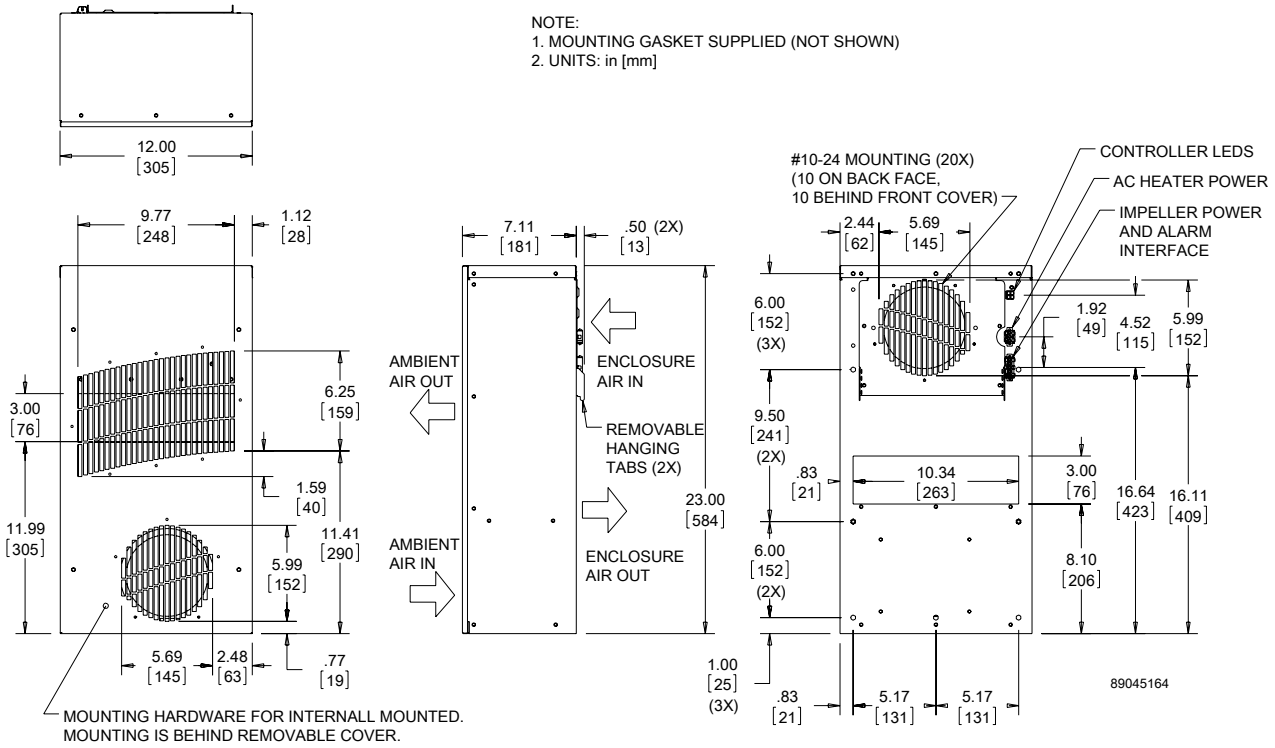

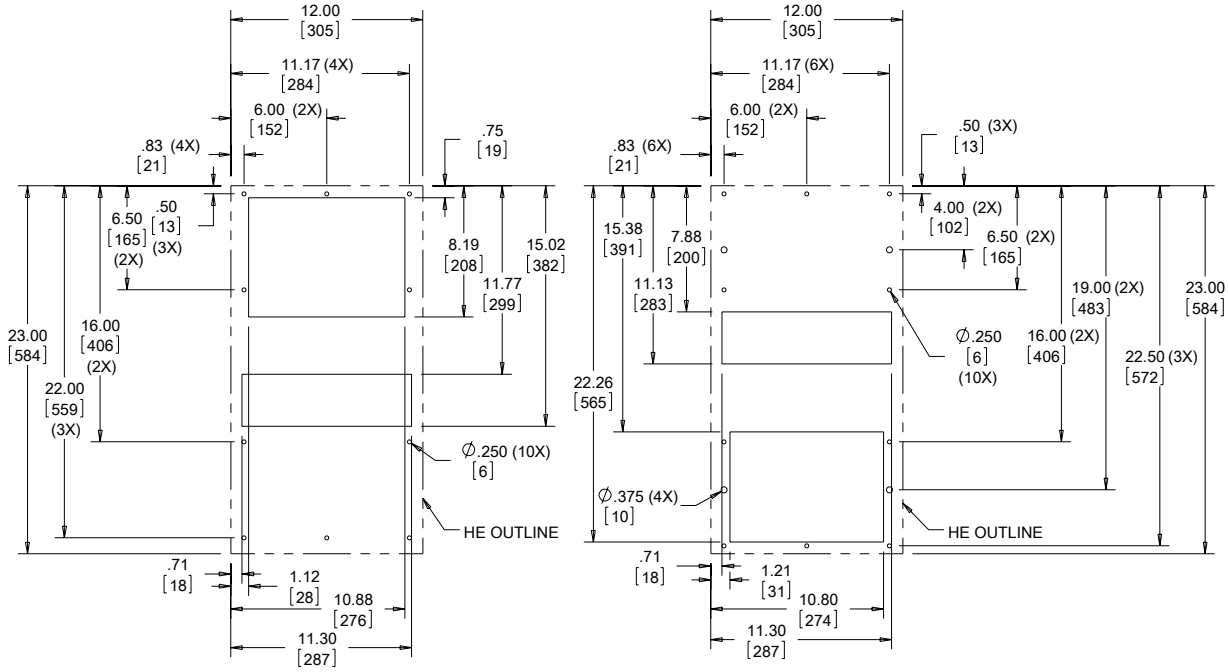

CUTOUT DIMENSIONS (EXTERNAL MOUNT)

CUTOUT DIMENSIONS (INTERNAL MOUNT)

Visit www.nVent.com/HOFFMAN to download 2D and 3D CAD drawings into the overall design of your electrical system.

TX23 AC Models 14 W/°F (25 W/°C)

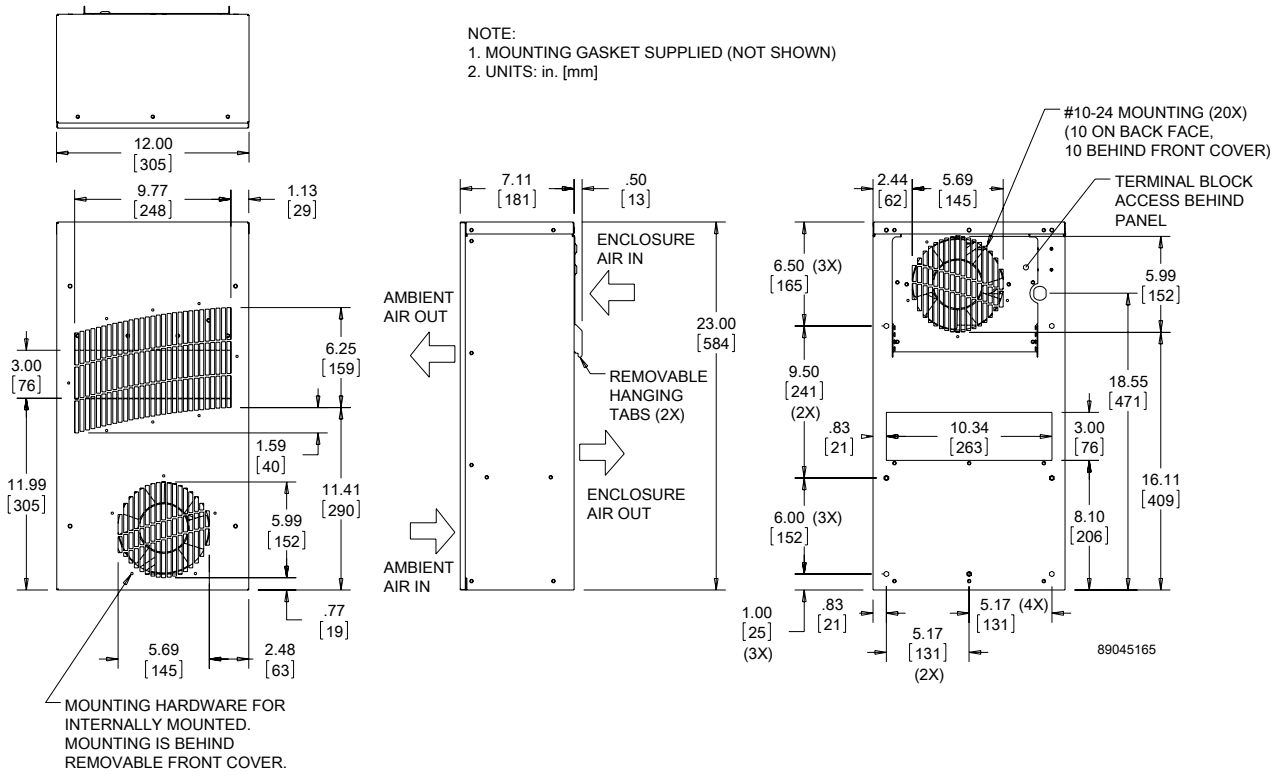

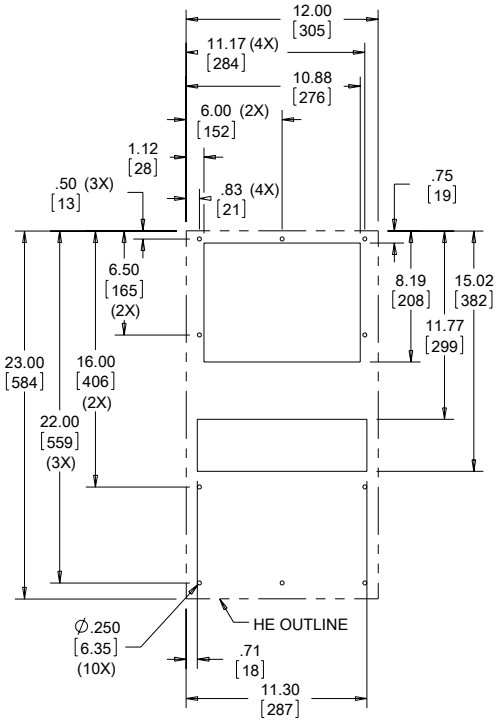

CUTOUT DIMENSIONS (EXTERNAL MOUNT)

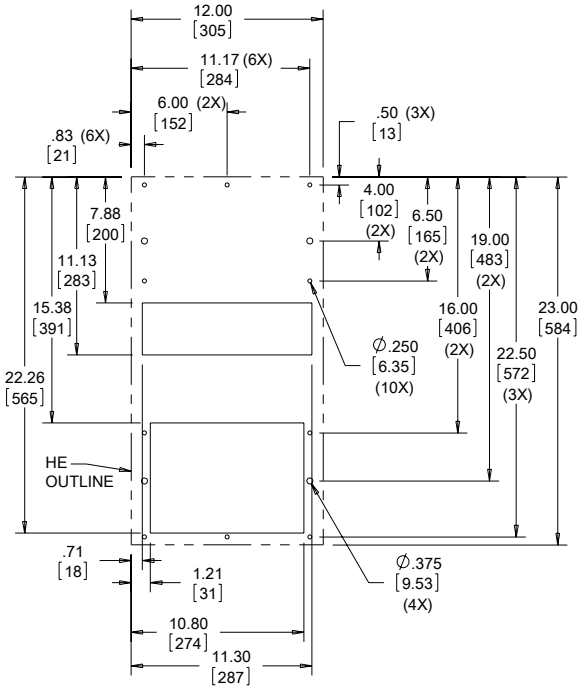

CUTOUT DIMENSIONS (INTERNAL MOUNT)

Visit www.nVent.com/HOFFMAN to download 2D and 3D CAD drawings into the overall design of your electrical system.

Performance Data **TX33 Models 28 W/°F (50 W/°C)**

CATALOG NUMBER	TX332816100	TX332826100	TX332824100	TX332848100
COOLING PERFORMANCE				
Nominal:				
W per °F	**28**	**28**	**28**	**28**
W per °C	**50**	**50**	**50**	**50**
Refrigerant	N/A	N/A	N/A	N/A
Refrigerant Charge (ounces/grams)	N/A	N/A	N/A	N/A
Operating Temperature Range:				
Maximum (°F/°C)	149/65	149/65	149/65	149/65
Minimum (°F/°C)	-40/-40	-40/-40	-40/-40	-40/-40
Airflow at 0 Static Pressure:				
Internal loop 50 Hz (CFM / m^3/hr.)	212/360	212/360	N/A	N/A
External loop 50 Hz (CFM / m^3/hr.)	238/404	238/404	N/A	N/A
Internal loop 60 Hz (CFM / m^3/hr.)	228/387	228/387	228/387	228/387
External loop 60 Hz (CFM / m^3/hr.)	263/447	263/447	166/282	166/282
ELECTRICAL DATA				
Rated Voltage	**115 VAC**	**230 VAC**	**24 VDC**	**48 VDC**
Frequency (Hz)	50/60	50/60	50/60	50/60
Operating Range	+/- 10%	+/- 10%	+/- 10%	+/- 10%
Max. Power Consumption (W at 50/60 Hz)	161	92	82	87
Max. Nominal Current (A at 50/60 Hz)	1.4	0.4	3.4	1.8
Agency Approvals	UL/cUL Listed CE EAC		UL/cUL Listed CE EAC	
Power Input Description	Terminal block	Terminal block	Terminal block	Terminal block
ENCLOSURE PROTECTION				
UL Type	Type 12, 3R, 4 standard Type 4X optional		Type 12, 3R, 4 standard Type 4X optional	
SOUND LEVEL				
At 1.5 Meters	56 dBA		56 dBA	
UNIT CONSTRUCTION				
Material	Mild steel sheet metal standard Stainless steel optional		Mild steel sheet metal standard Stainless steel optional	
Finish	RAL 7035 light-gray, semi-textured powder-coat paint standard		RAL 7035 light-gray, semi-textured powder-coat paint standard	
UNIT DIMENSIONS				
Height (in./mm)	33/838.2	33/838.2	33/838.2	33/838.2
Width (in./mm)	15.7/398.8	15.7/398.8	15.7/398.8	15.7/398.8
Depth (in./mm)	8.1/205.7	8.1/205.7	8.1/205.7	8.1/205.7
Weight (lb./kg)	45/20.4	45/20.4	45/20.4	45/20.4

TX 33 DC Models 28 W/°F (50 W/°C)

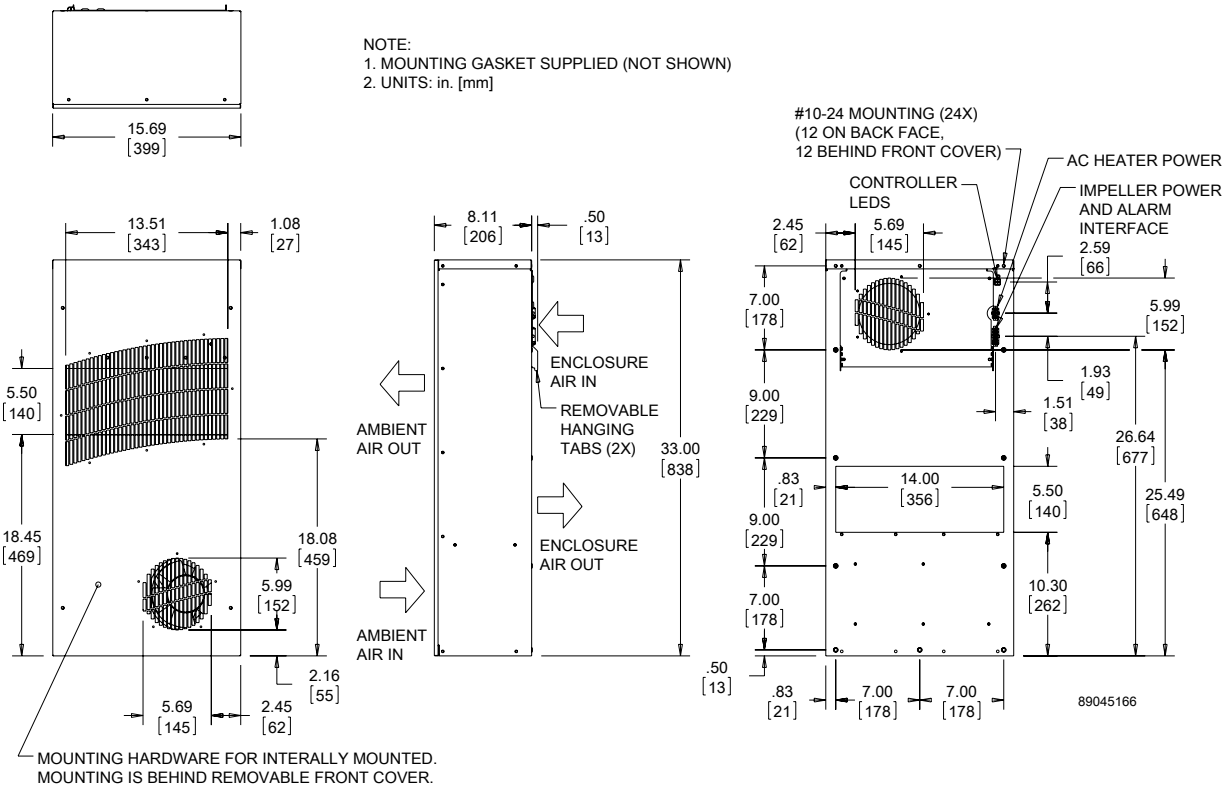

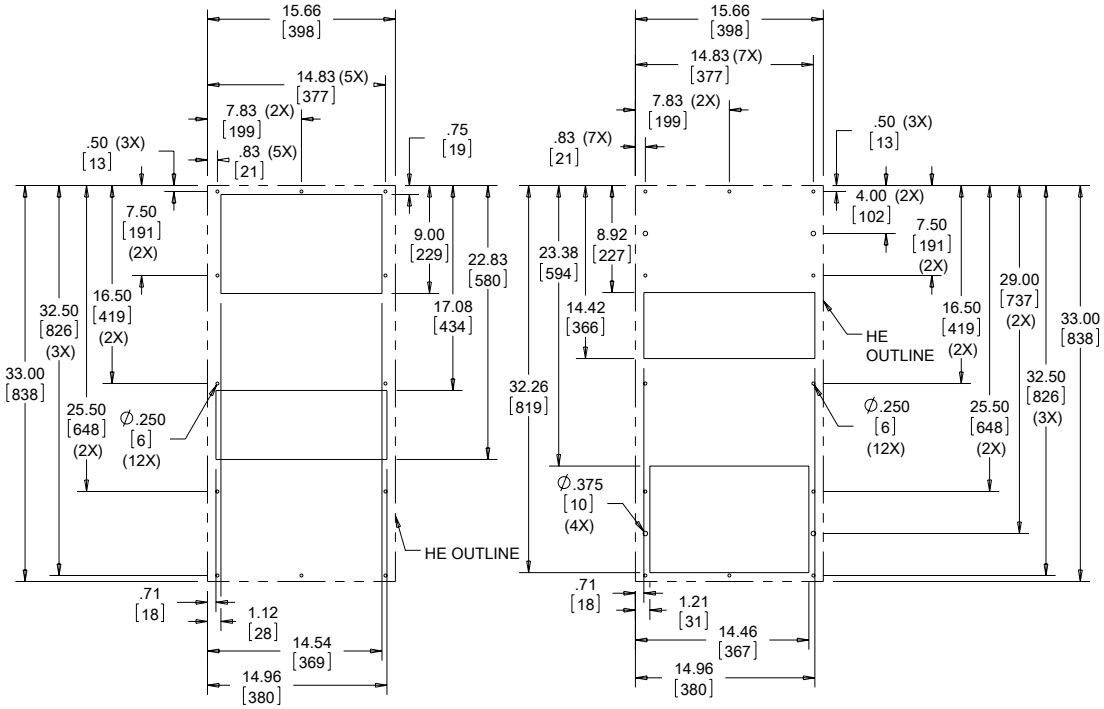

Cutout Dimensions (External Mount)

Cutout Dimensions (Internal Mount)

Visit www.nVent.com/HOFFMAN to download 2D and 3D CAD drawings into the overall design of your electrical system.

TX33 AC Models 28 W/°F (50 W/°C)

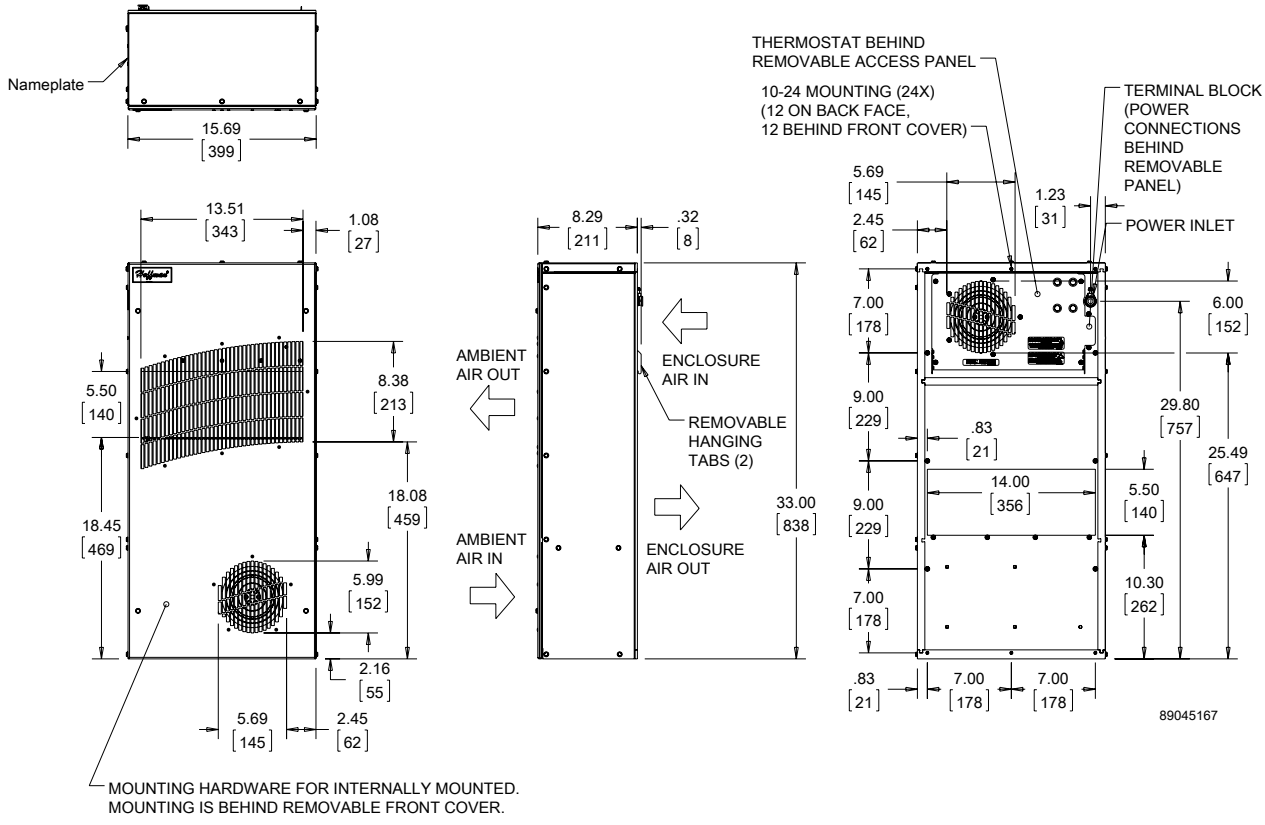

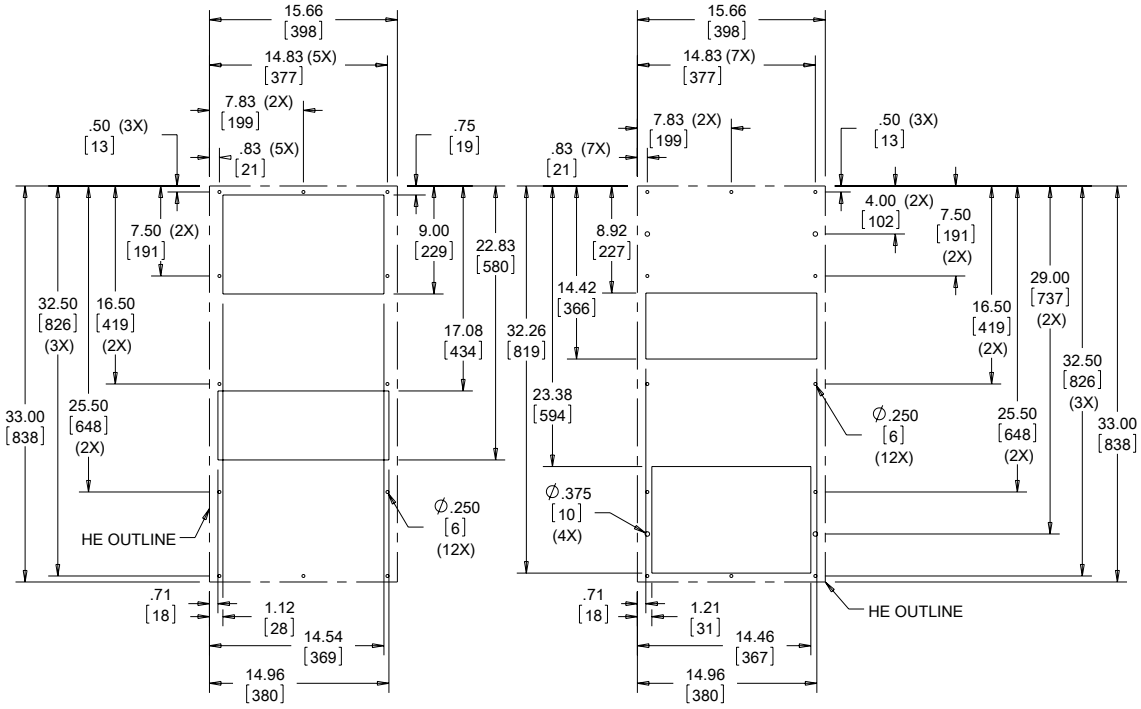

Visit www.nVent.com/HOFFMAN to download 2D and 3D CAD drawings into the overall design of your electrical system.

Performance Data **TX38 Models 56 W/°F (100 W/°C)**

CATALOG NUMBER	TX385616100	TX385626100	TX385624100	TX385648100
COOLING PERFORMANCE				
Nominal:				
W per °F	**56**	**56**	**56**	**56**
W per °C	**100**	**100**	**100**	**100**
Refrigerant	N/A	N/A	N/A	N/A
Refrigerant Charge (ounces/grams)	N/A	N/A	N/A	N/A
Operating Temperature Range:				
Maximum (°F/°C)	149/65	149/65	149/65	149/65
Minimum (°F/°C)	-40/-40	-40/-40	-40/-40	-40/-40
Airflow at 0 Static Pressure:				
Internal loop 50 Hz (CFM / m^3/hr.)	425/722	425/722	N/A	N/A
External loop 50 Hz (CFM / m^3/hr.)	461/738	461/738	N/A	N/A
Internal loop 60 Hz (CFM / m^3/hr.)	477/810	477/810	368/625	368/625
External loop 60 Hz (CFM / m^3/hr.)	517/878	517/878	422/717	422/717
ELECTRICAL DATA				
Rated Voltage	**115 VAC**	**230 VAC**	**24 VDC**	**48 VDC**
Frequency (Hz)	50/60	50/60	50/60	50/60
Operating Range	+/- 10%	+/- 10%	+/- 10%	+/- 10%
Max. Power Consumption (W at 50/60 Hz)	368	276	207	279
Max. Nominal Current (A at 50/60 Hz)	2.3/3.2	0.7/1.2	8.6	5.8
Agency Approvals	UL/cUL Listed CE EAC		UL/cUL Listed CE EAC	
Power Input Description	Terminal block	Terminal block	Terminal block	Terminal block
ENCLOSURE PROTECTION				
UL Type	Type 12, 3R, 4 standard Type 4X optional		Type 12, 3R, 4 standard Type 4X optional	
SOUND LEVEL				
At 1.5 Meters	64 dBA		64 dBA	
UNIT CONSTRUCTION				
Material	Mild Mild steel sheet metal standard		Mild Mild steel sheet metal standard	
Finish	RAL 7035 light-gray, semi-textured powder-coat paint standard		RAL 7035 light-gray, semi-textured powder-coat paint standard	
UNIT DIMENSIONS				
Height (in./mm)	38/965.2	38/965.2	38/965.2	38/965.2
Width (in./mm)	19.7/500.4	19.7/500.4	19.7/500.4	19.7/500.4
Depth (in./mm)	10.1/256.5	10.1/256.5	10.1/256.5	10.1/256.5
Weight (lb./kg)	66/30	66/30	66/30	66/30

TX38 DC Models 56 W/°F (100 W/°C)

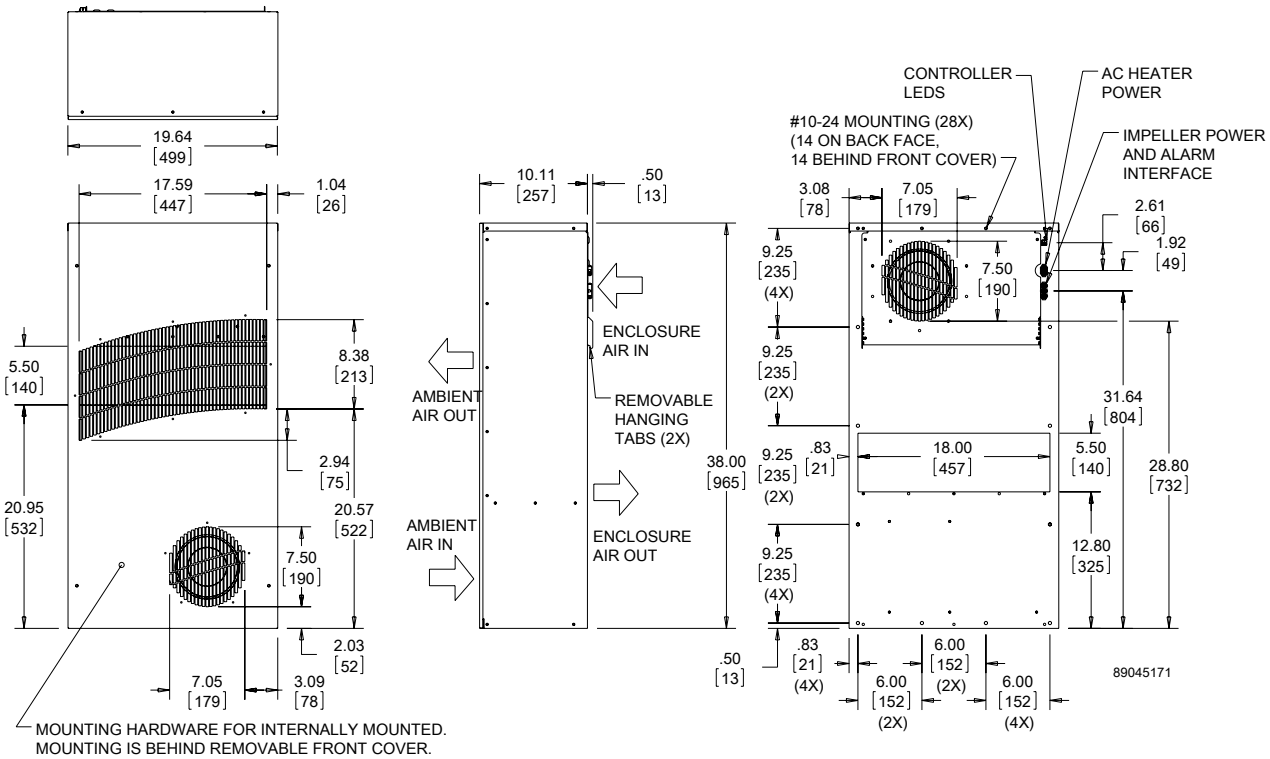

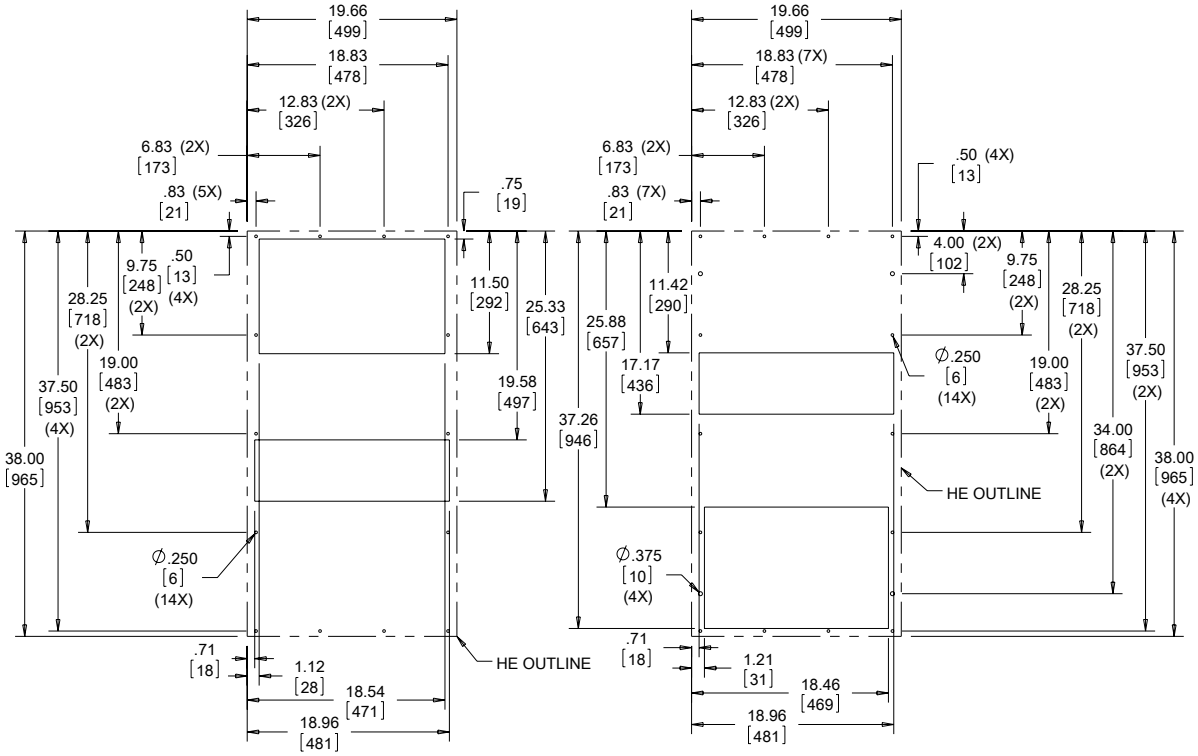

Cutout Dimensions (External Mount)

Cutout Dimensions (Internal Mount)

Visit www.nVent.com/HOFFMAN to download 2D and 3D CAD drawings into the overall design of your electrical system.

TX38 AC Models 56 W/°F (100 W/°C)

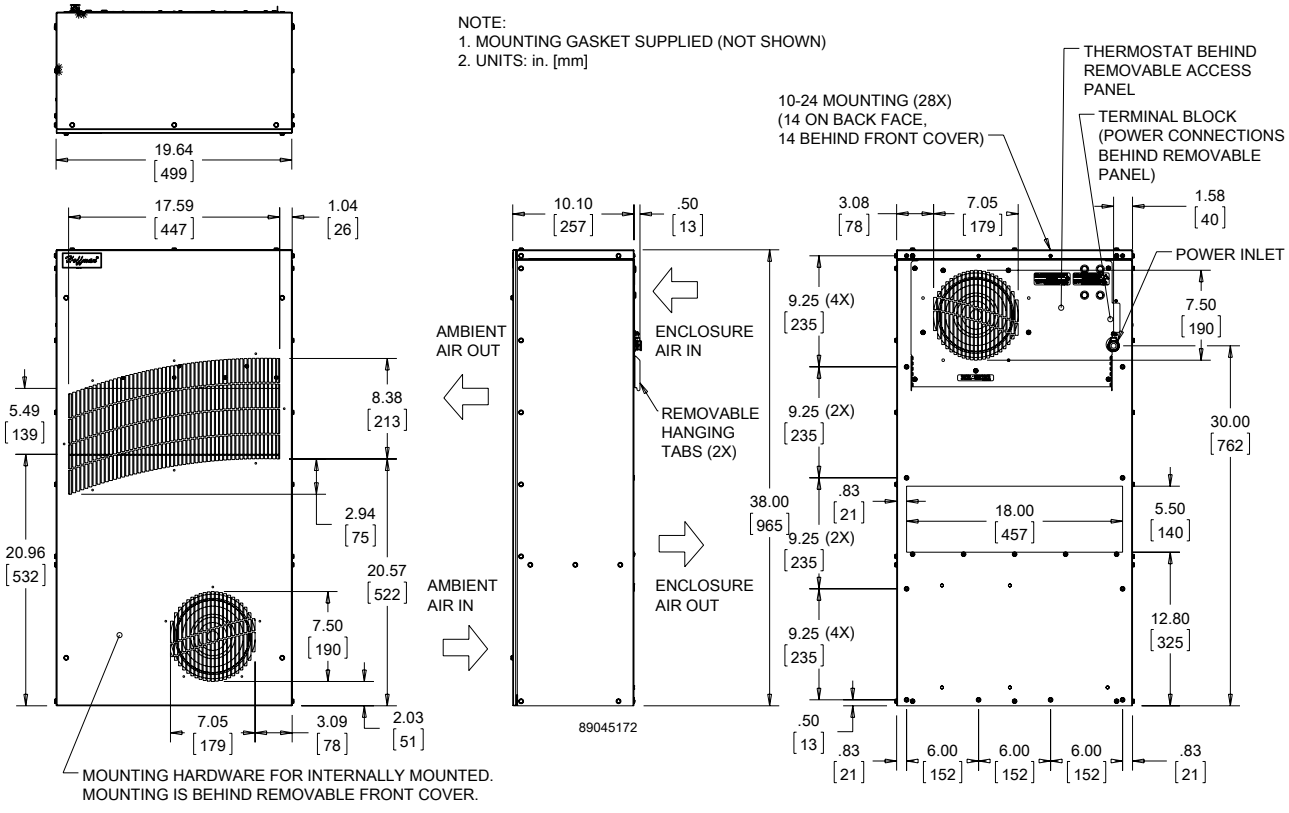

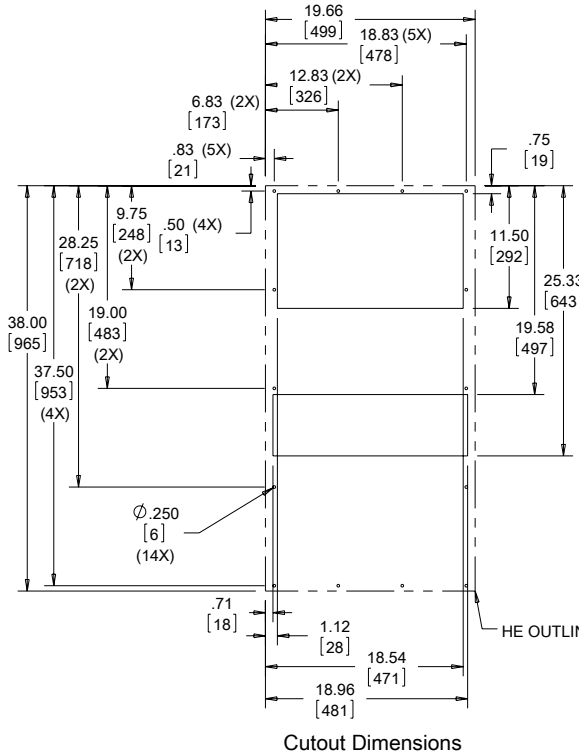

Cutout Dimensions (External Mount)

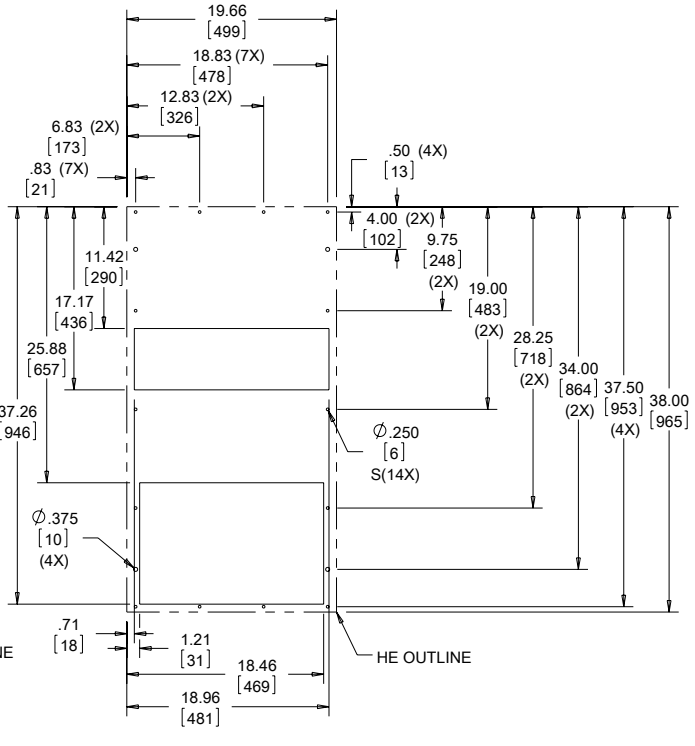

Cutout Dimensions (Internal Mount)

Visit www.nVent.com/HOFFMAN to download 2D and 3D CAD drawings into the overall design of your electrical system.

Performance Data **TX52 Models 83 W/°F (150 W/°C)**

CATALOG NUMBER	TX528316100	TX528326100	TX528324100	TX528348100
COOLING PERFORMANCE				
Nominal:				
W per °F	**83**	**83**	**83**	**83**
W per °C	**150**	**150**	**150**	**150**
Refrigerant	N/A	N/A	N/A	N/A
Refrigerant Charge (ounces/grams)	N/A	N/A	N/A	N/A
Operating Temperature Range:				
Maximum (°F/°C)	149/65	149/65	149/65	149/65
Minimum (°F/°C)	-40/-40	-40/-40	-40/-40	-40/-40
Airflow at 0 Static Pressure:				
Internal loop 50 Hz (CFM / m^3/hr.)	495/841	495/841	N/A	N/A
External loop 50 Hz (CFM / m^3/hr.)	540/917	540/917	N/A	N/A
Internal loop 60 Hz (CFM / m^3/hr.)	533/905	533/905	466/792	466/792
External loop 60 Hz (CFM / m^3/hr.)	605/1028	605/1028	547/929	547/929
ELECTRICAL DATA				
Rated Voltage	**115 VAC**	**230 VAC**	**24 VDC**	**48 VDC**
Frequency (Hz)	50/60	50/60	50/60	50/60
Operating Range	+/- 10%	+/- 10%	+/- 10%	+/- 10%
Max. Power Consumption (W at 50/60 Hz)	782	771	507	375
Max. Nominal Current (A at 50/60 Hz)	4.3/6.7	2.2/3.4	21.1	7.8
Agency Approvals	UL/cUL Listed CE EAC		UL/cUL Listed CE EAC	
Power Input Description	Terminal block	Terminal block	Terminal block	Terminal block
ENCLOSURE PROTECTION				
UL Type	Type 12, 3R, 4 standard Type 4X optional		Type 12, 3R, 4 standard Type 4X optional	
SOUND LEVEL				
At 1.5 Meters	68 dBA		68 dBA	
UNIT CONSTRUCTION				
Material	Mild steel sheet metal standard Stainless steel optional		Mild steel sheet metal standard Stainless steel optional	
Finish	RAL 7035 light-gray, semi-textured powder-coat paint standard		RAL 7035 light-gray, semi-textured powder-coat paint standard	
UNIT DIMENSIONS				
Height (in./mm)	52/1320.8	52/1320.8	52/1320.8	52/1320.8
Width (in./mm)	19.7/500.4	19.7/500.4	19.7/500.4	19.7/500.4
Depth (in./mm)	10.1/256.5	10.1/256.5	10.1/256.5	10.1/256.5
Weight (lb./kg)	100/45.3	100/45.3	100/45.3	100/45.3

TX52 DC Models 83 W/°F (150 W/°C)

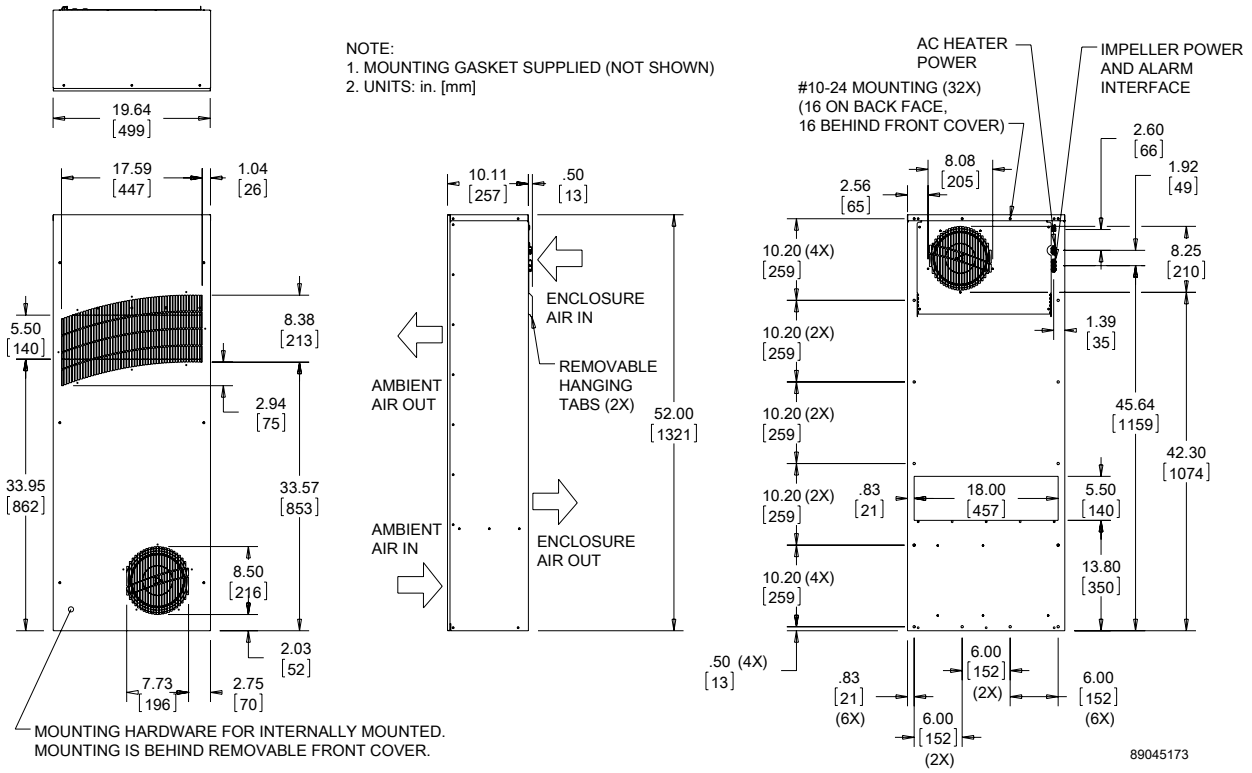

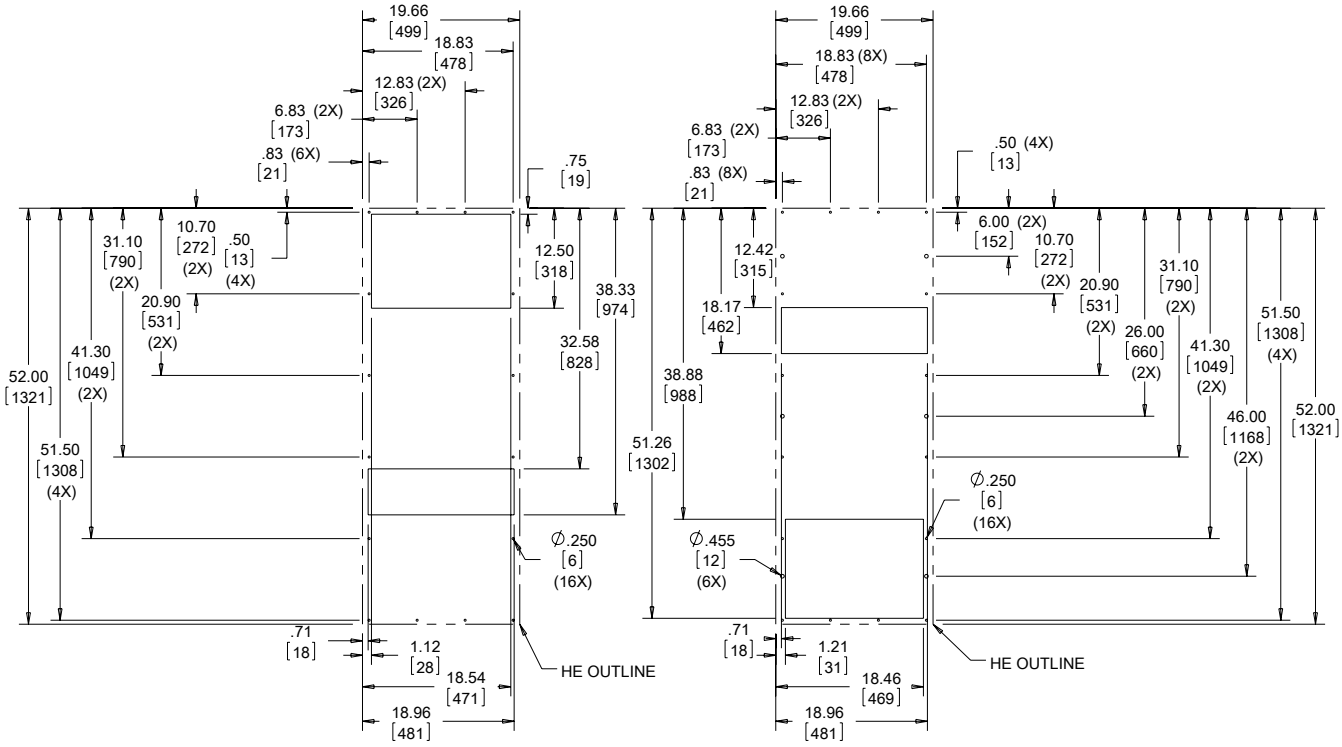

Cutout Dimensions (External Mount)

Cutout Dimensions (Internal Mount)

Visit www.nVent.com/HOFFMAN to download 2D and 3D CAD drawings into the overall design of your electrical system.

TX52 AC Models 83 W/°F (150 W/°C)

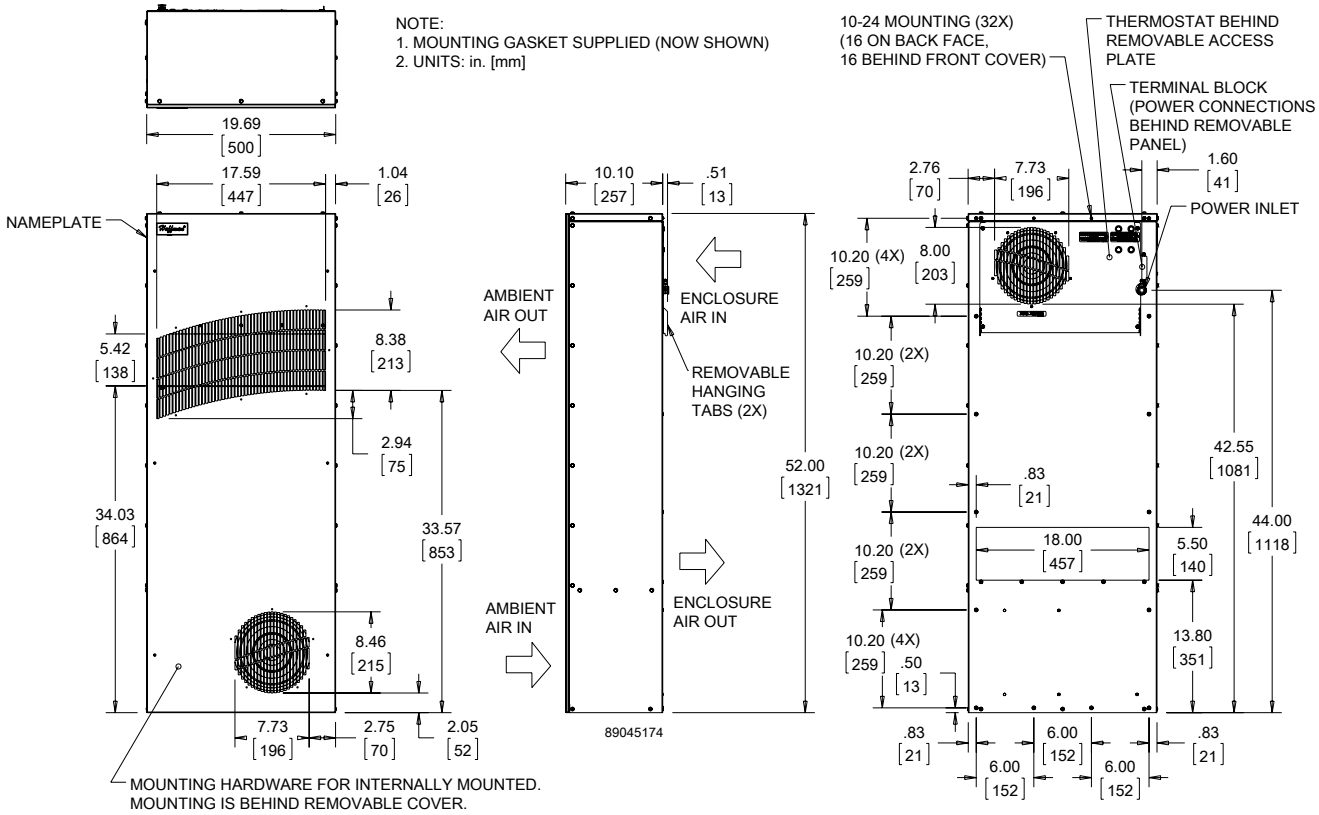

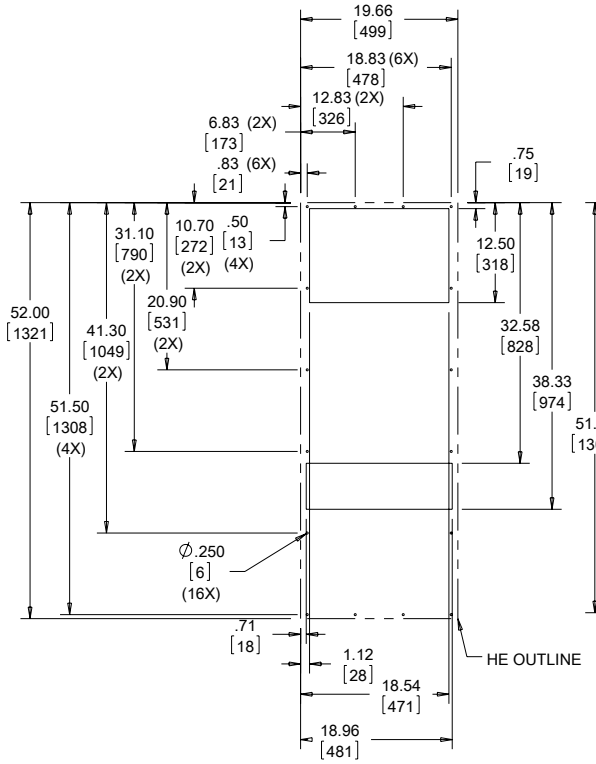

Cutout Dimensions (External Mount)

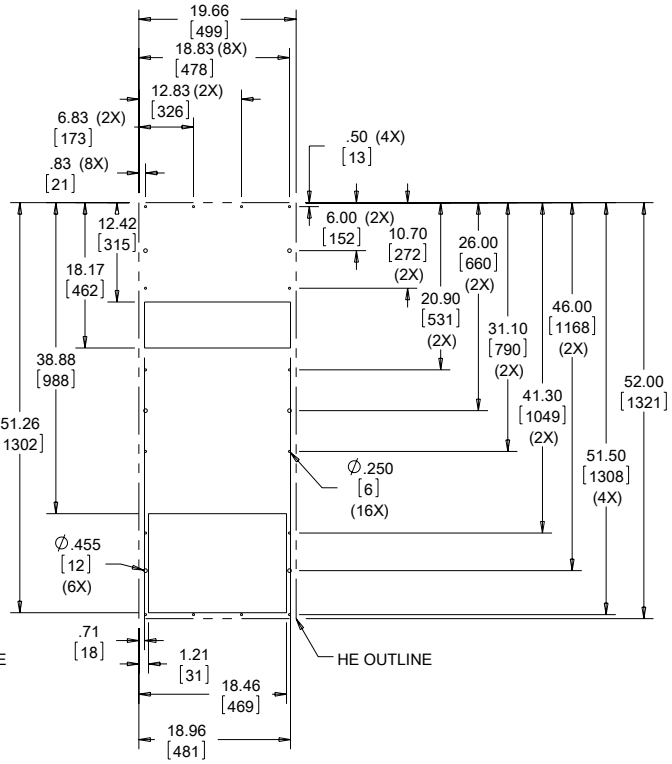

Cutout Dimensions (Internal Mount)

Visit www.nVent.com/HOFFMAN to download 2D and 3D CAD drawings into the overall design of your electrical system.

Notes