BALDOR
A MEMBER OF THE ABB GROUP

BALDOR • RELIANCE

Product Information Packet

M8001

.5HP,1725RPM,3PH,60HZ,56,3416M,TEFC,F1,N

Copyright © All product information within this document is subject to Baldor Electric Company copyright © protection, unless otherwise noted.

Part Detail							
Revision:	AB	**Status:**	INA/A	**Change #:**		**Proprietary:**	No
Type:	AC	**Prod. Type:**	3416M	**Elec. Spec:**	34WG0872	**CD Diagram:**	CD0005
Enclosure:	TEFC	**Mfg Plant:**		**Mech. Spec:**	34K046	**Layout:**	34LYK046
Frame:	56	**Mounting:**	F1	**Poles:**	04	**Created Date:**	
Base:	RG	**Rotation:**	R	**Insulation:**	F	**Eff. Date:**	07-27-2016
Leads:	9#18					**Replaced By:**	
Literature:		**Elec. Diagram:**					

BALDOR A MEMBER OF THE ABB GROUP

Nameplate NP1261E

CAT.NO.							
SPEC.	34K46-872						
HP	.5						
VOLTS	230/460						
AMP	2/1						
RPM	1725						
FRAME	56	HZ	60			PH	3
SER.F.	1.25	CODE	L	DES	B	CL	F
NEMA-NOM-EFF	74	PF	63				
RATING	40C AMB-CONT						
CC						USABLE AT 208V	2.5
DE	6203	ODE	6203				
ENCL	TEFC	SN					
	SFA 2.4/1.2						

BALDOR A MEMBER OF THE ABB GROUP

AC Induction Motor Performance Data

Record # 20819 - Typical performance - not guaranteed values

Winding: 34WG0872-R009	**Type:** 3416M	**Enclosure:** TEFC

Nameplate Data				460 V, 60 Hz: High Voltage Connection	
Rated Output (HP)	.5			Full Load Torque	1.5 LB-FT
Volts	230/460			Start Configuration	direct on line
Full Load Amps	2/1			Breakdown Torque	7 LB-FT
R.P.M.	1725			Pull-up Torque	4.5 LB-FT
Hz	60	Phase	3	Locked-rotor Torque	5.3 LB-FT
NEMA Design Code	B	KVA Code	L	Starting Current	6.5 A
Service Factor (S.F.)	1.25			No-load Current	0.8 A
NEMA Nom. Eff.	74	Power Factor	63	Line-line Res. @ 25ºC	32 Ω
Rating - Duty	40C AMB-CONT			Temp. Rise @ Rated Load	65°C
S.F. Amps	2.4/1.2			Temp. Rise @ S.F. Load	77°C
				Locked-rotor Power Factor	66
				Rotor inertia	0.0381 LB-FT2

Load Characteristics 460 V, 60 Hz, 0.5 HP

% of Rated Load	25	50	75	100	125	150	S.F.
Power Factor	30	43	55	63	69	75	0
Efficiency	53.2	66.4	72.5	74.6	75.3	75.1	0
Speed	1782	1769	1754	1739	1724	1706	0
Line amperes	0.8	0.85	0.92	1.03	1.15	1.25	1.15

BALDOR A MEMBER OF THE ABB GROUP

Performance Graph at 460V, 60Hz, 0.5HP Typical performance - Not guaranteed values

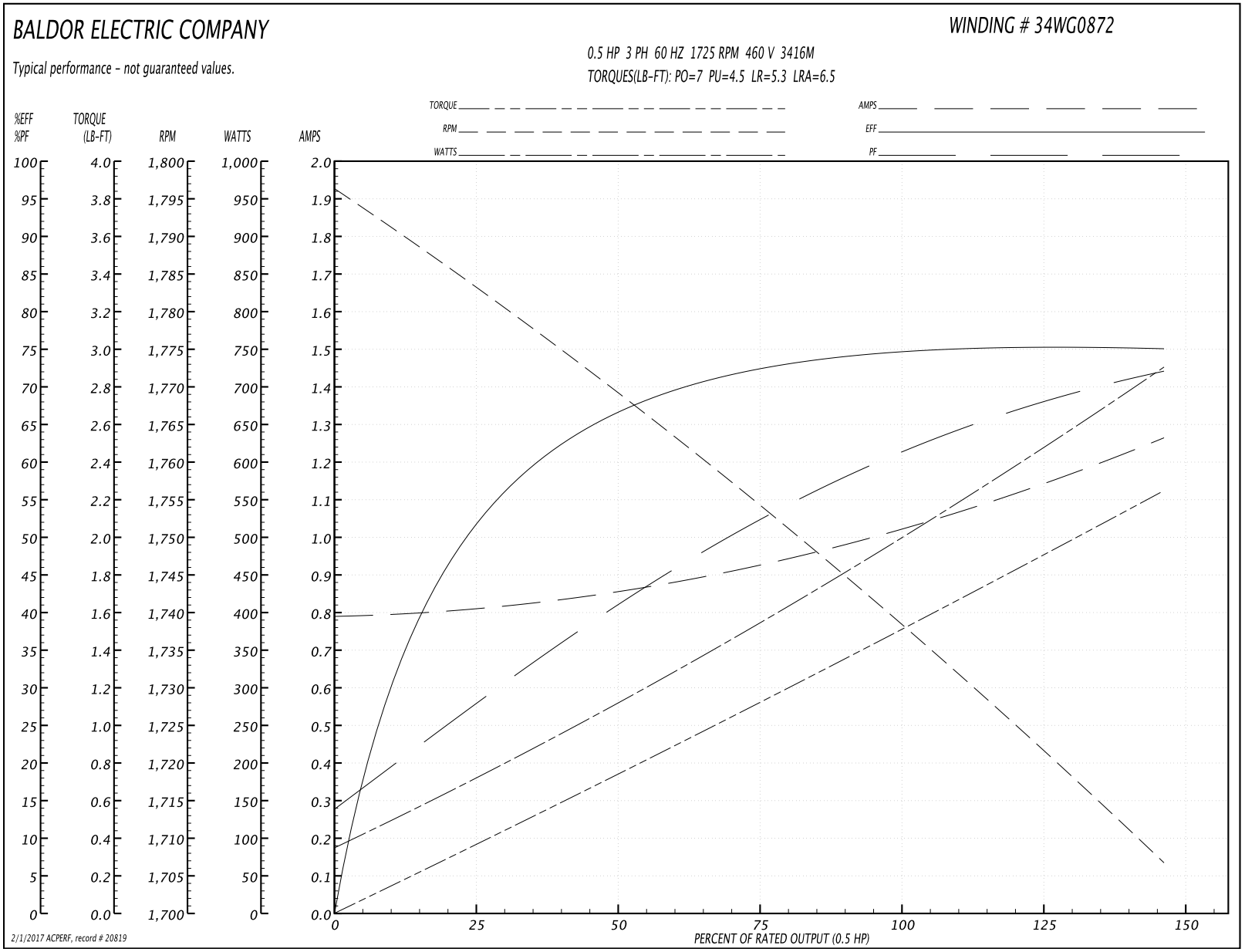

BALDOR
A MEMBER OF THE ABB GROUP

34LYK046

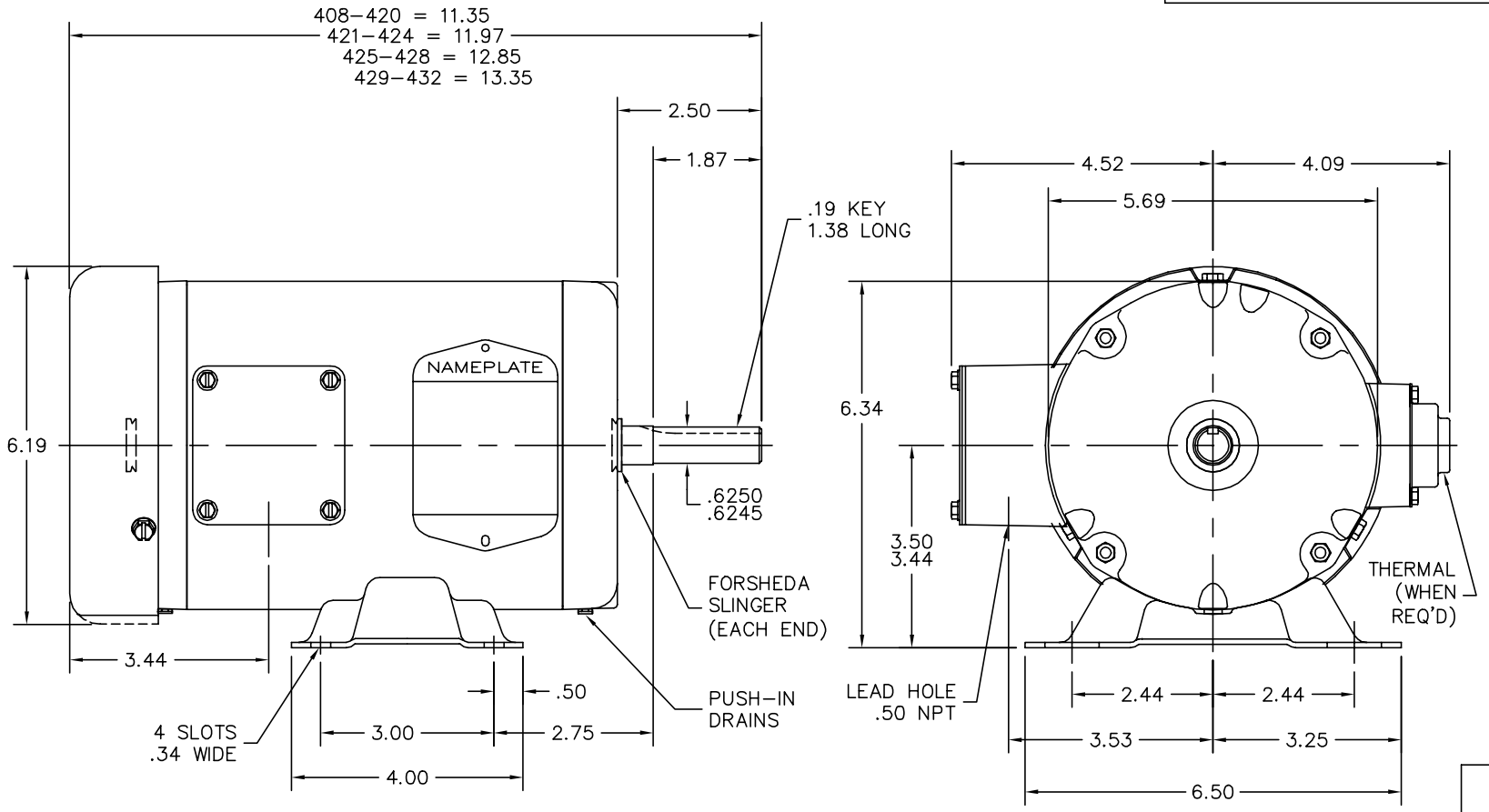

34LYK046

CUSTOMER IS RESPONSIBLE FOR DETERMINING THAT BALDOR'S PRODUCT WILL PERFORM SUITABLY IN THE INTENDED APPLICATION.

REV. DESC: CHG FR SLINGER TO V–RING, CHG DESC TO HAVE DD		
REV. LTR: E	VERSION: 03	TDR: 000000941160
FILE: \AAA\00025\916	REVISED: 02:47:38 08/28/2015	BY: ENFRAJ0
MTL: –		

BALDOR

HORZ 34M NEMA 56 TEFC DD

SH 1 of 1

BALDOR
A MEMBER OF THE ABB GROUP

CD0005

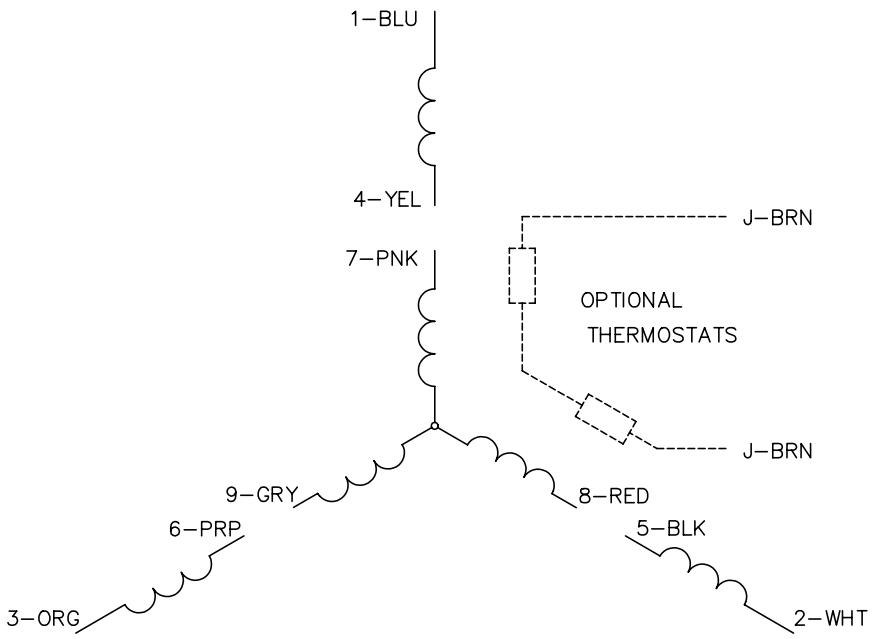

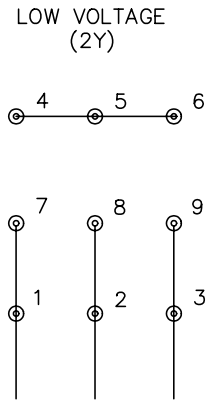

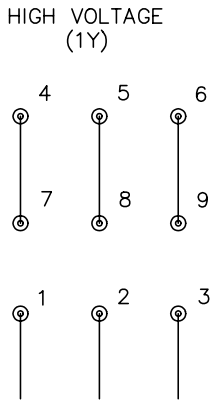

NOTES:

1. INTERCHANGE ANY TWO LINE LEADS TO REVERSE ROTATION.
2. OPTIONAL THERMOSTATS ARE PROVIDED WHEN SPECIFIED.
3. ACTUAL NUMBER OF INTERNAL PARALLEL CIRCUITS MAY BE A MULTIPLE OF THOSE SHOWN ABOVE.
4. LEAD COLORS ARE OPTIONAL. LEADS MUST ALWAYS BE NUMBERED AS SHOWN.

CD0005

REV. DESC: REVISE TO SHOW OPTIONAL COLORS			BALDOR ELECTRIC Co.
REV. LTR: E	BY: JLP	REVISED: 01/19/99 10:15	TDR: 0171435
CD0005		FILE: AAA00005140	MDL: –
		MTL: –	3PH, DV, 9 LEADS

BALDOR A MEMBER OF THE ABB GROUP