Single Pole Devices and Temporary Power

150A, 600V AC/250V DC

Female Plugs

HUBBELL

Features

- Extra Long non-conductive inner sleeve
- Turn and Lock Symbol aids in the mating of devices
- Easily Identifiable Cable with cut off points for secure fit



Ordering Information

Description	Device Color	UPC	Catalog Number
150A, thermoplastic elastomer,cable size #8 - #2 AWG	Green	783585458410	**HBL15FGN**

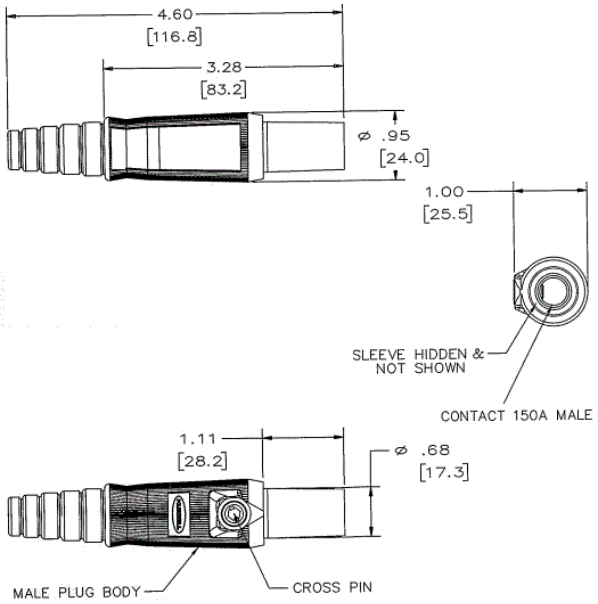

Standards

UL and cUL Listed
UL Enclosure Types 3R, 4X, 12
National Electric Code (NEC), ANSI/NFPA 70

Specifications

Base Compound	Thermoplastic Elastomer (TPE)
Contact Material	Brass
Retaining Screw Material	Nylon

Performance

Electrical

Amperage Rating	150A Maximum
Voltage Ratings	600V AC Maximum; 250V DC Maximum

Mechanical

Product Identification	Ratings are a permanent part of device
Terminal Accommodation	#8 to #2 AWG

Online Resources

eCatalog

Dimensions in Inches (mm)

HUBBELL® Wiring Device-Kellems