Floor Boxes
Accessories
Round Covers



Ordering Information

Description	Material	UPC	Catalog Number
Round Floor Box	Aluminum	783585129709	SA2525

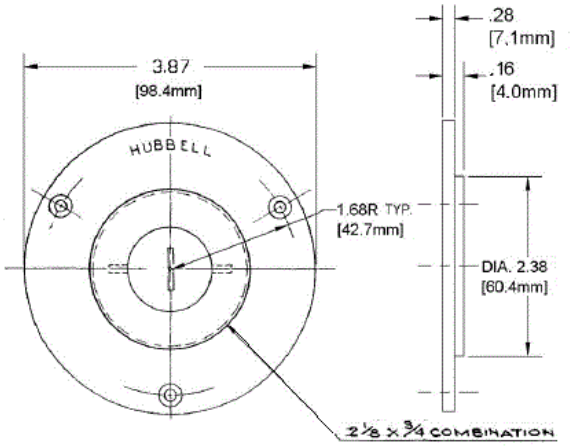

Specifications

Cover Style	Round
Cover Finish	Aluminum
Cover Opening	Combo 2 1/8" x 3/4"

Online Resources

Customer Use Drawing
eCatalog
Installation Instructions

Dimensions in Inches (mm)

Wiring Device-Kellems