BALDOR
A MEMBER OF THE ABB GROUP

BALDOR • RELIANCE

Product Information Packet

FDL3611M

2HP,1725RPM,1PH,60HZ,184,3634L,TEFC,F1,N

Copyright © All product information within this document is subject to Baldor Electric Company copyright © protection, unless otherwise noted.

Part Detail							
Revision:	J	**Status:**	PRD/A	**Change #:**		**Proprietary:**	No
Type:	AC	**Prod. Type:**	3634L	**Elec. Spec:**	36WGX416	**CD Diagram:**	CD0008
Enclosure:	TEFC	**Mfg Plant:**		**Mech. Spec:**	36Q169	**Layout:**	36LYQ169
Frame:	184	**Mounting:**	F1	**Poles:**	04	**Created Date:**	12-12-2013
Base:	RG	**Rotation:**	R	**Insulation:**	F	**Eff. Date:**	01-19-2017
Leads:	4#14 A&J,2#16 B PH,1#10 #4TH					**Replaced By:**	
Literature:		**Elec. Diagram:**					

BALDOR A MEMBER OF THE ABB GROUP

Nameplate NP1280L

CAT.NO.	FDL3611M						
SPEC.	36Q169X416G1						
HP	2						
VOLTS	115/230						
AMP	24.8/12.4						
RPM	1725						
FRAME	184	**HZ**	60			**PH**	1
SER.F.	1.00	**CODE**	L	**DES**	L	**CL**	F
NEMA-NOM-EFF	74	**PF**	73				
RATING	40C AMB-CONT						
CC						**USABLE AT 208V**	
DE	6206	**ODE**	6205				
ENCL	TEFC	**SN**					

BALDOR A MEMBER OF THE ABB GROUP

AC Induction Motor Performance Data

Record # 61427 - Typical performance - not guaranteed values

Winding: 36WGX416-R002	**Type:** 3634L	**Enclosure:** TEFC

Nameplate Data				230 V, 60 Hz: High Voltage Connection	
Rated Output (HP)	2			Full Load Torque	6 LB-FT
Volts	115/230			Start Configuration	direct on line
Full Load Amps	28/14			Breakdown Torque	16 LB-FT
R.P.M.	1725			Pull-up Torque	15 LB-FT
Hz	60	Phase	1	Locked-rotor Torque	24 LB-FT
NEMA Design Code	L	KVA Code	J	Starting Current	75 A
Service Factor (S.F.)	1			No-load Current	8.55 A
NEMA Nom. Eff.	75	Power Factor	67	Line-line Res. @ 25ºC	0.732 Ω A Ph 0.396 Ω B Ph
Rating - Duty	40C AMB-CONT			Temp. Rise @ Rated Load	78°C

Load Characteristics 230 V, 60 Hz, 2 HP

% of Rated Load	25	50	75	100	125	150
Power Factor	34	49	61	70	75	79
Efficiency	53.8	68.3	74.2	76.8	77.6	77.4
Speed	1788	1778	1767	1756	1743	1729
Line amperes	8.98	9.65	10.75	12.15	13.85	15.85

BALDOR A MEMBER OF THE ABB GROUP

Performance Graph at 230V, 60Hz, 2.0HP Typical performance - Not guaranteed values

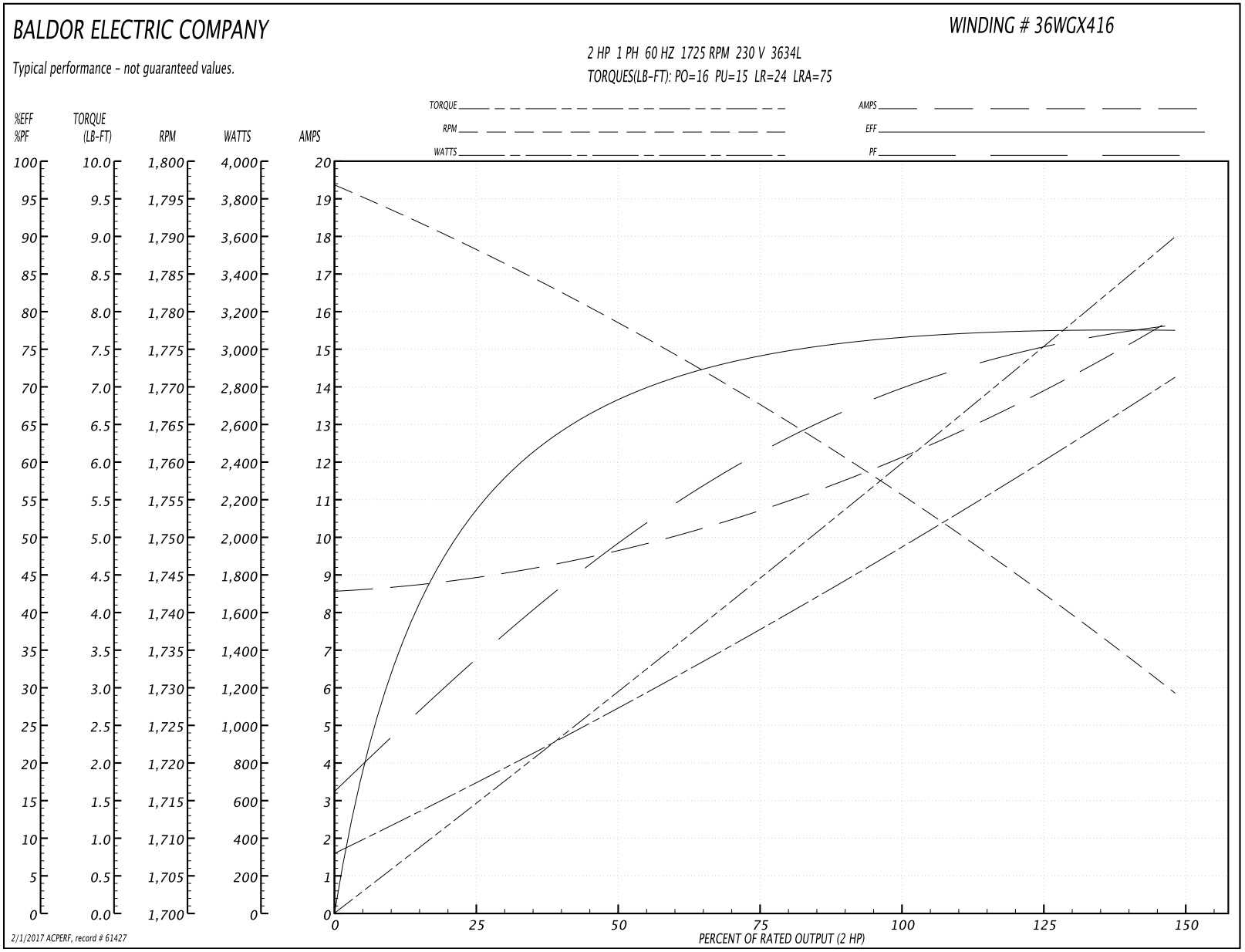

BALDOR
A MEMBER OF THE ABB GROUP

36LYQ169

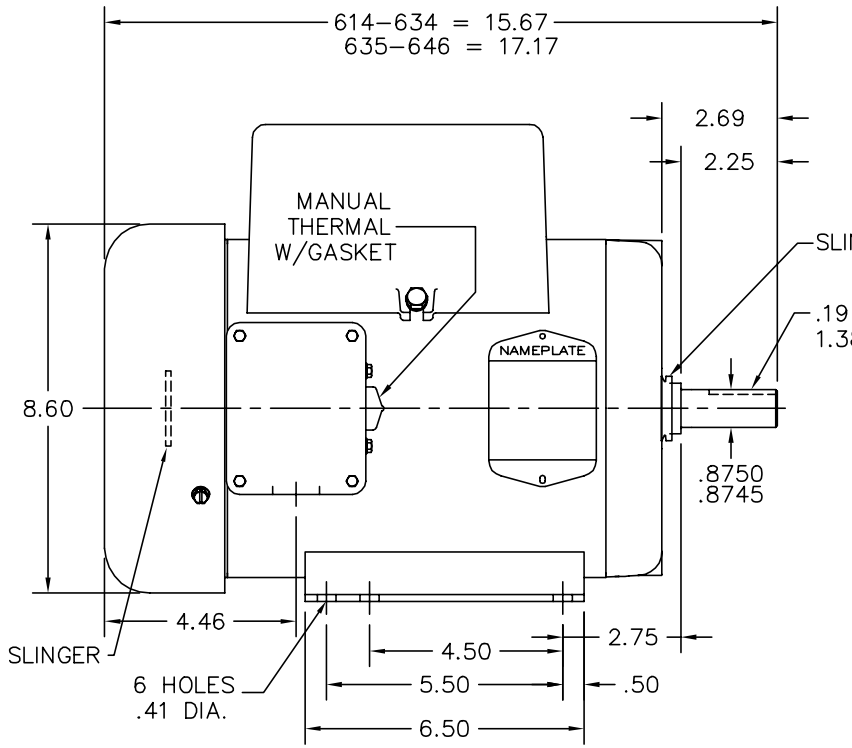

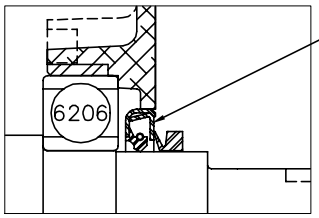

APPLY COAT OF SEALER TO HOUSING BEFORE PRESSING IN SEAL

PULLEY END DETAIL

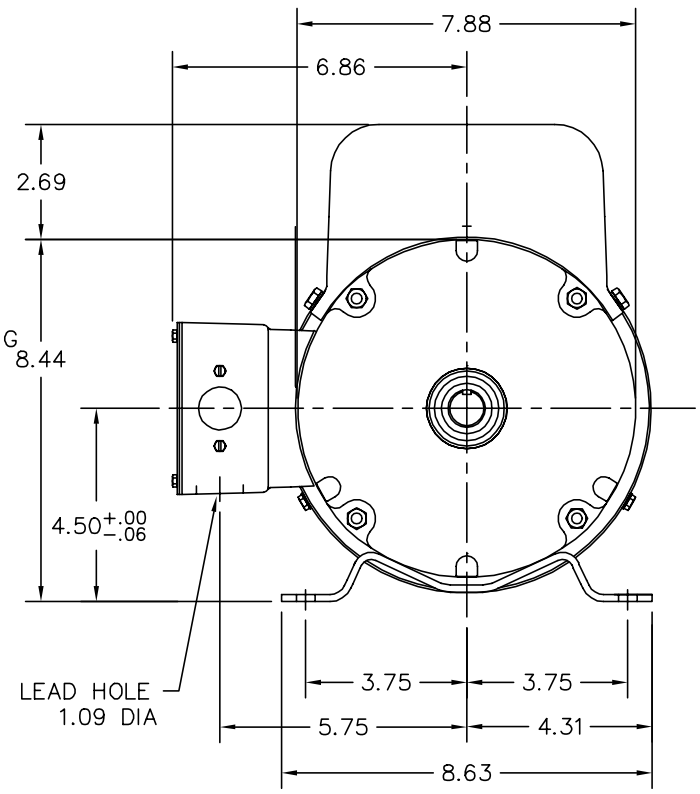

FARM DUTY

36LYQ169

CUSTOMER IS RESPONSIBLE FOR DETERMINING THAT BALDOR'S PRODUCT WILL PERFORM SUITABLY IN THE INTENDED APPLICATION.

REV. DESC: ADD FLAT SLINGER TO ODE		
REV. LTR: C	VERSION: 03	TDR: 000000909271
FILE: \AAA\00205\536	REVISED: 10:52:21 04/08/2015	BY: ENKANV0
MTL: –		

BALDOR

HOR 182–4 TEFC LC, 1" MTO IN KOBX, SEAL PU END, TORQ

SH 1 of 1

BALDOR A MEMBER OF THE ABB GROUP

CD0008

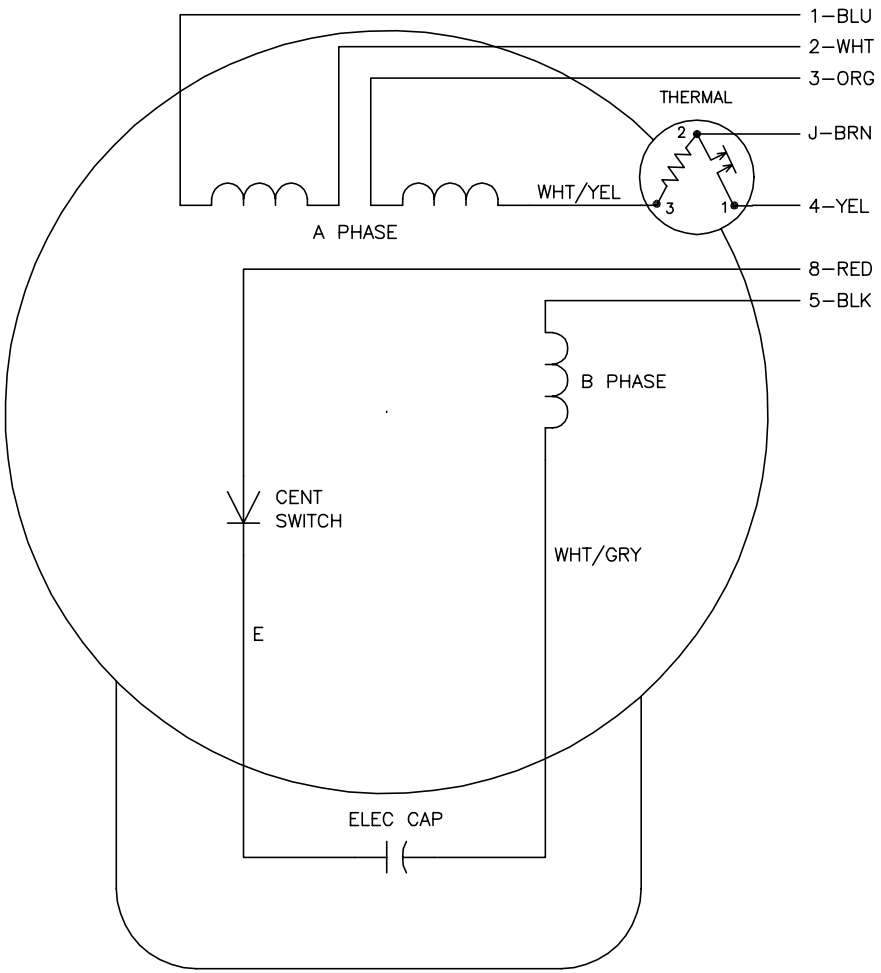

	LINE A	LINE B	JOIN	JOIN
HIGH STD	1	4	2,3,8	J,5
HIGH OPP	1	4	2,3,5	J,8
LOW STD	1,3,8	4	–	2,J,5
LOW OPP	1,3,5	4	–	2,J,8

NOTES:

1. STANDARD ROTATION IS CCW FACING END OPPOSITE SHAFT EXTENSION.
2. MULTIPLE CAPACITORS ARE CONNECTED IN PARALLEL UNLESS OTHERWISE SPECIFIED.
3. LEAD COLORS ARE OPTIONAL. LEADS MUST ALWAYS BE NUMBERED AS SHOWN.

CD0008

REV. DESC: REMOVE 2–TERMINAL THERMAL DETAIL, SEE CD0008A02			BALDOR ELECTRIC Co.
REV. LTR: F	VERSION: 01	TDR: 000000360649	
CD0008	FILE: \AAA\00007\408	REVISED: 10:56:54 04/18/2005	TYPE L, DV, REV, THERMAL, 7 LEADS
	MTL: –	BY: ENJOEPO	

BALDOR A MEMBER OF THE ABB GROUP