DESCRIPTION

When AC power fails, the Sure-Lites Emergency Battery Pack LED (EBP) automatically switches to emergency mode. The EBP maintains illumination of an LED fixture for a minimum of 90 minutes. The product line is UL924 classified for field retrofit installation and has guaranteed compatibility with Cooper Lighting Solutions LED fixtures with accessible LED drivers. The constant power feature ensures consistent light output of the fixture for 90 minutes minimum. The EZ Key and laser test features simplify maintenance and installation. These products are not for use with sealed and gasketed fixtures.

Catalog #		Type
Project		
Comments		Date
Prepared by		

SPECIFICATION FEATURES

ELECTRONIC

- Universal voltage input 120 through 277 VAC, 50/60Hz
- Constant power output of 7 Watts or 14 Watts depending on model
- Automatically senses voltage required within these ranges:
  EBPLED7W from 8 V to 55 V
  EBPLED7W-3H from 16 V to 55 V
  EBPLED14W from 16 V to 55 V
- Low-voltage disconnect to protect battery life
- Test Button/Indicator Light/laser test/external battery disconnect
- O°C to 55°C operation

CONSTRUCTION

- Steel housing
  EBPLED7W = 10.06 inches
  EBPLED14W = 14.56 inches
- Plenum rated test button cable
- Lead wires and 24" flexible metallic conduit provided

BATTERY

- Sealed Nickel Cadmium
- Maintenance-free, Long-life
- Full Recharge Time, 24 hours (max.)
- 90 minute run time EBPLED7W/ EBPLED14W
- 180 minute run time EBPLED7W-3H

WARRANTY

- Five-year warranty

CODE COMPLIANCE

- UL 924 Classified
- Life Safety NFPA 101
- NEC/OSHA
- Most State and Local Codes
- California Energy Code

T20 Certified to California Title 20 Appliance Database

HOW TO SPECIFY

Sure-Lites LED field installable emergency battery back with automatic voltage sensing, constant wattage output, external battery disconnect, laser test capability and nickel cadmium battery.

DIMENSIONS

EBPLED7W

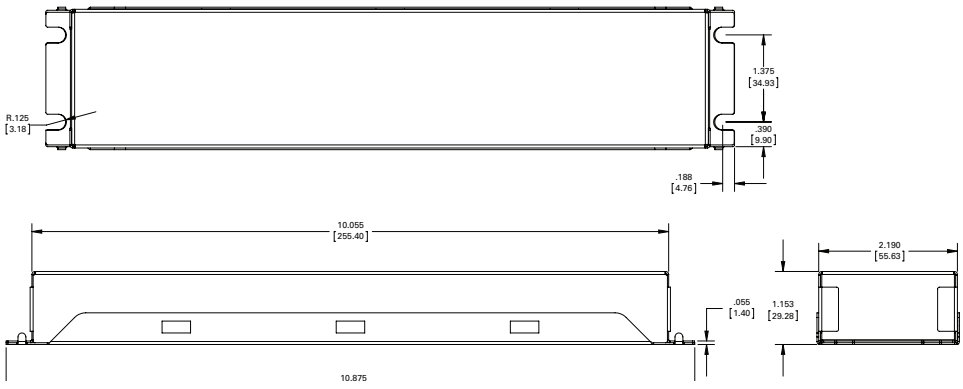

EBPLED14W / EBPLED7W-3H

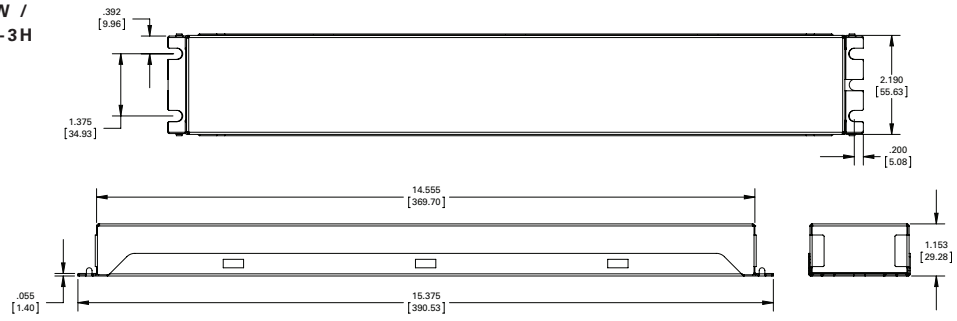

ORDERING INFORMATION

SAMPLE NUMBER: EBPLED7W

Series	Output	Run time
EBPLED= LED Emergency Battery Pack	**7W**=7 Watt	_=90 minute **-3H**=180 minute
	14W=14 Watt	_=90 minute

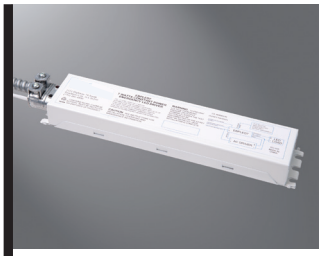

EBPLED7W



EBPLED14W



EBPLED7W-3H

EBPLED Emergency Battery Packs

LED

TECHNICAL DATA

Universal Voltage Charger
Unit is supplied with a constant current, switch mode charging circuit which automatically detects the voltage level of the AC input (120V through 277V) and adjusts accordingly. This simplifies and mistake proof's the wiring.

Automatic Switching
The switching circuitry is designed to detect an absence of AC power and automatically switch into emergency operation. Upon restoration of AC power the lamps will automatically switch back to operating from the AC ballast.

Automatic detection of LED load forward voltage
Unit detects the LED forward voltage required (from 8V to 55V for 7W unit, 16V to 55V for 14W unit) and adjusts output current to provide constant wattage to the fixture, ensuring compatibility with a wide range of LED fixtures.

Constant Wattage Output
Unit provides constant power which ensures a consistent illumination while in emergency mode. Fixture lumen output is easily calculated by multiplying the unit wattage by the fixture efficacy (ie lumens/watt) from DLC data.

www.designlights.org

Example:

EBPLED	= 14W
DLC EFF	= 100 lumens/watt
EM Lumens	= 14W x 100 lumens/watt
	= 1400 lumens

Test Button/Indicator Light
Simulates interruption of AC power and illuminates LED fixture. LED charge indicator light indicates battery charger operation.

Laser Test
Enables remote testing by utilizing a laser pointer to simulate AC power loss and engagement of emergency operation. Can be mechanically activated by pushing the button or by optically activating with a laser tester.

EZ Key External Battery Disconnect
Prevents the battery from cycling during the construction phase and ensures a full battery charge for C.O. inspection.

Battery
High temperature nickel cadmium battery pack is standard.

Warranty
All Sure-Lites EBP products are backed by a firm five-year warranty against defects in material and workmanship.

FEMA Requirement
EBP7W-3H provides a 3 hour run time to meet and exceed the FEMA tornado safe room requirement of two hours of operation.

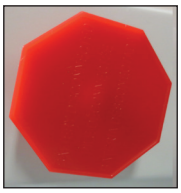

EZ key



Test button



Laser tester
Part Number = LASER
(sold separately)

WIRING DIAGRAM

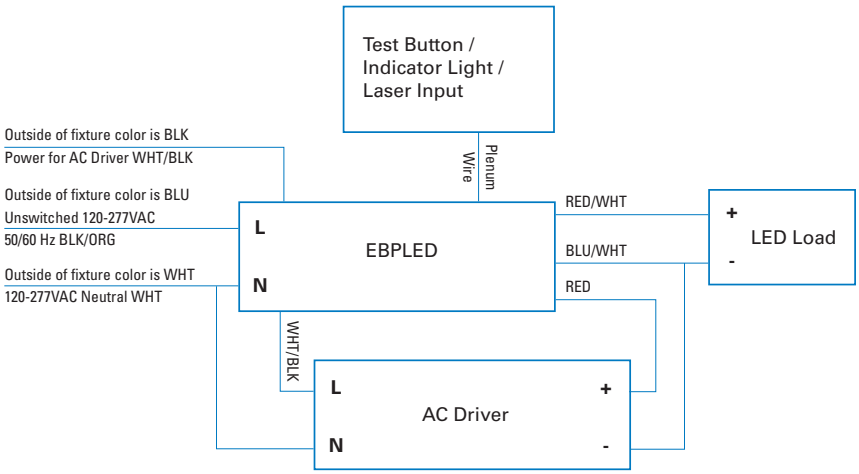

Cooper Lighting Solutions
1121 Highway 74 South
Peachtree City, GA 30269
P: 770-486-4800
www.cooperlighting.com

© 2020 Cooper Lighting Solutions
All Rights Reserved
Printed in USA
Publication No. TD505002EN
May 16, 2017

Cooper Lighting Solutions is a registered trademark.

All other trademarks are property of their respective owners.

Product availability, specifications, and compliances are subject to change without notice