THIS COPY IS PROVIDED ON A RESTRICTED BASIS AND IS NOT TO BE USED IN ANY WAY DETRIMENTAL TO THE INTERESTS OF PANDUIT CORP.

PART NUMBER	MATERIAL	"B" HEIGHT +/-.062	IMPRINT AREA "C" +/-.062	VERTICAL REPEAT "D" +/-.062	"E" +/-.025	LABELS PER ROW	STANDARD PKG. QTY.
S200X225VAIY	GMV16 OR GMV17 △3	2.25 [57.2]	0.75 [19.1]	2.50 [63.5]	0.063 [1.60]	2	500
S200X400VAIY		4.00 [101.6]	1.00 [25.4]	4.25 [108.0]			
S200X650VAIY		6.50 [165.1]	1.50 [38.1] +/-.10	6.75 [171.5]			

NOTES:
1. MILLIMETERS ARE IN [ ].

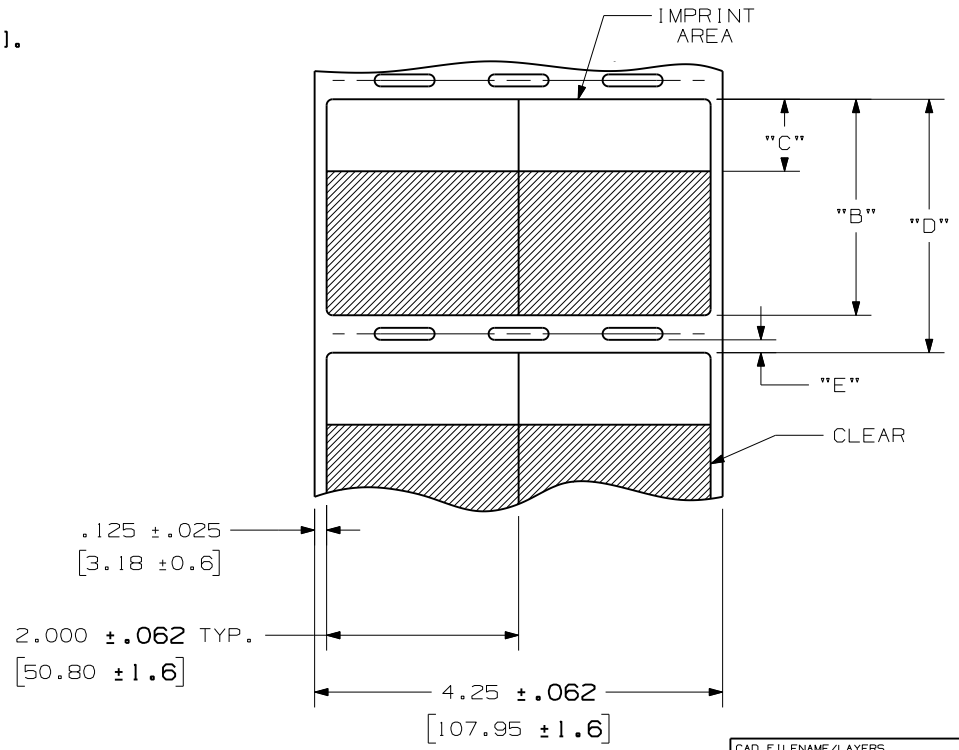

CAD FILENAME/LAYERS: I00472BR-DC-C10193/04D

PANDUIT CORP. TINLEY PARK, ILLINOIS

CUSTOMER DRAWING
OPTIMUM SELF-LAM. S200X***VAIY
THERMAL TRANSFER PRINTABLE LABELS

REV	DATE	BY	CHK	DESCRIPTION	ECN - R	CUST	SUP
3	10/25/11	RVU		"GMV16 OR GMV17" WAS "GMV16".	6548 R		
2	12/10/09	RVU		OBS. PN: S200X***VAI AND S200X400TAI. UPDATE ALL STANDARD TOLERANCES EXCEPT 1.50 +/-.10.	5925 R		
1	1-8-07	RVU		REVISED TOLERANCES.	4830 R		
0	9-11-06	RVU		DRAWING RELEASE.	4671 R		

UNLESS OTHERWISE SPECIFIED, DIMENSIONAL TOLERANCES ARE:
(.X) ± .12 (.XXX) ± .025
(.XX) ± .062 ANGLES ±

UNLESS OTHERWISE SPECIFIED, ALL DIMENSIONS ARE GIVEN IN INCHES, THIRD ANGLE PROJECTION.

DRAWN BY: RVU
DATE: 9-22-04
CHK'D:
MAT'L; SEE TABLE
SCALE: NTS
DRAWING NO.: C10193
DWG SIZE: A