Raceway
Metal Raceway
HBL500 Series Base and Cover

HUBBELL

Features

- Available in 10 foot lengths
- Packed 100 feet per carton
- HBL5701C coupling furnished with each length

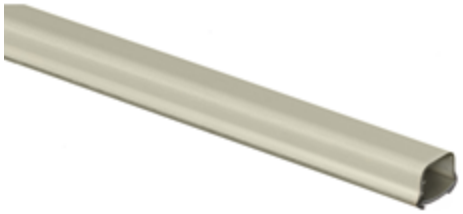

Ordering Information

Description	Color	UPC Number	Catalog Number
Base and Cover	Ivory	783585216652	**HBL50010IV**

Listings

UL Listed
CSA Certified

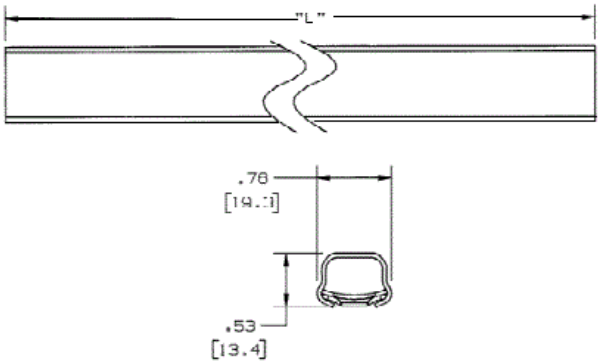

Specifications

Height	0.53 inches
Width	0.76 inches
Length	10 feet

Online Resources

Customer Use Drawing
eCatalog
Installation Instructions

Dimensions in Inches (mm)

HUBBELL® Wiring Device-Kellems