Raceway
Metal Raceway
HBL750 Series Base and Cover

Features

- Hubbell's exclusive HBL750 Series adds an additional profile for data and electrical applications
- Available in 5 ft. (1.5m) lengths, packed 50 ft. (15m) per carton and 10 ft. (3m) lengths, packed 100 ft. (30m) per carton.
- HBL5701C coupling furnished with each length.
- Ideal for datacom and oversized neutral applications
- Largest single channel low profile raceway available in its class



Ordering Information

Description	Material	UPC Number	Catalog Number
Base and Cover	Steel	783585218571	**HBL75010IV**

Color
Ivory

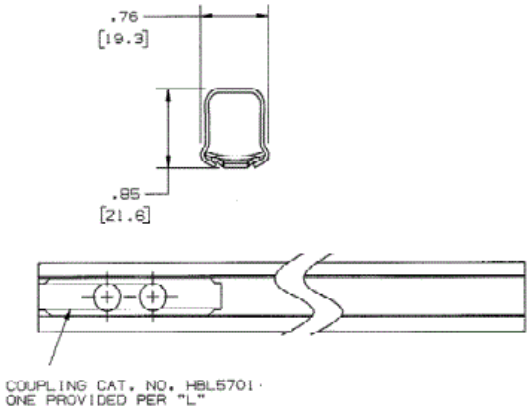

Listings

UL Listed
CSA Certified

Specifications

Height	0.85"
Width	0.76"
Length	10'

Online Resources

Customer Use Drawing
eCatalog
Installation Instructions

Dimensions in Inches (mm)

Wiring Device-Kellems