Mini-Com® High Density Modular Patch Panels

PANDUIT®
SPECIFICATION SHEET

SPECIFICATIONS

High density modular patch panels shall consist of a metal panel with molded front or rear snap-in faceplates. Patch panels shall accept all Mini-Com Modules for UTP, STP, A/V or select fiber and shall mount to standard 19" racks. Patch Panels shall be available in 32-port (1 RU), 48-port (1 RU) and 72-port (2 RU). Select styles shall be available in white. Flush mount panels shall be easy to identify with pre-numbered ports. Angled patch panels shall be designed at an optimum angle to help route the cable.

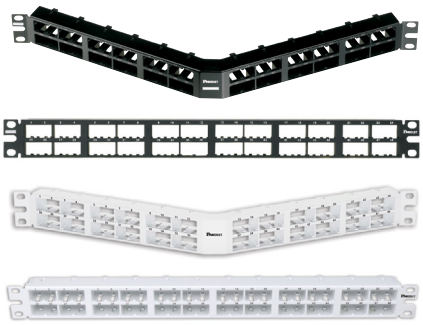

TECHNICAL INFORMATION

Mounting options:	Mounts to standard 19" rack
Material:	Stamping is CRS and faceplate is ABS
Packaging:	Packaged with appropriate pre-installed snap in faceplates and a set of mounting screws (#12-24)

KEY FEATURES AND BENEFITS

Modular:	Panels with front snap-in faceplates will accept any Mini-Com® Modules and panels with rear snap-in faceplates will accept all UTP, STP, A/V and most fiber modules
Angled design:	Minimizes the need for horizontal cable managers enabling patch cords to be routed directly into vertical cable managers which leads to increase closet density
Port and panel indentfication:	Pre-numbered ports and labeling capabilities on select panels
Optional filler panels:	Flat and angled design fill unused rack openings to provide a clean and consistent look when used with any version of Panduit patch panels
Optional extender bracket:	Allows 19" patch panels to be mounted on a 23" rack
High density:	More modules per rack space

APPLICATIONS

Mini-Com® High Density Patch Panels are ideal for multi-media applications. Flat and angled designs are available in various port densities to fit most needs. Flush mount style includes pre-numbered ports or area for adhesive labeling, select faceplate style panels with label pockets include prenumbered labels and covers. Angled patch panels are available for applications in which rack space is limited. The design allows cable to flow to each side of the rack, minimizing the need for horizontal cable managers and increasing the density of the rack space. High density patch panels can mount on a standard 19" rack or a 23" rack when using the extender brackets PEB1 or PEB2.

Mini-Com® High Density Flat Style, Flush Mount	
48-port, 1 RU:	CPP48HDW*
48-port, 1 RU (extended area for labeling):	CPP48HDEW**
48-port, 1 RU (vertical numbering):	CPP48HDVNSW*
72-port, 2 RU:	CPP72FMWBLY
Mini-Com High Density Angled Style, Flush Mount	
48-port, 1 RU:	CPPA48HDW*
48-port, 1 RU (extended area for labeling):	CPPA48HDEW**
48-port, 1 RU (vertical numbering):	CPPA48HDVNSW**
72-port, 2 RU:	CPPA72FMWBLY
Mini-Com High Density Patch Panels Faceplate Style	
32-port, 1 RU, flat:	CPP32WBLY
72-port, 2 RU, flat:	CPPL72WBLY
72-port, 2 RU, angled:	CPPLA72WBLY
Patch Panel Accessories	
Black Transitional cover:	CPATC**
Angled filler panel, 1 RU:	CPAF1*
Angled filler panel, 2 RU:	CPAF2*
Flat filler panel, 1 RU:	DPFP1^
Flat filler panel, 2 RU:	DPFP2^
Extender Brackets	
1 RU:	PEB1
2 RU:	PEB2

*Colors: BLY (Black) or WH (White)
**Colors: BL (Black) or WH (White)
^Colors other than Black: WH (White)

LABEL CHART

Part numbers with labeling options:	Label Type	Replacement for label pocket	Laser/Ink	MP300
CPP32WBLY	Adhesive	—	T024X000FJT	T024X000FJM-BK
CPP48HDEWBL				
CPP48HDEWWH				
CPPA48HDEWBL				
CPPA48HDEWWH				
CPP72FMWBLY				
CPPA72FMWBLY				
CPPL72WBLY	Pocket	C72PPLK		
CPPLA72WBLY				

ENGINEERING DRAWING

CPP32WBLY

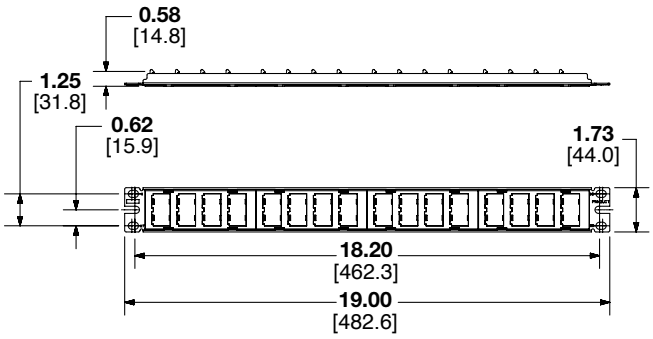

CPPL72WBLY

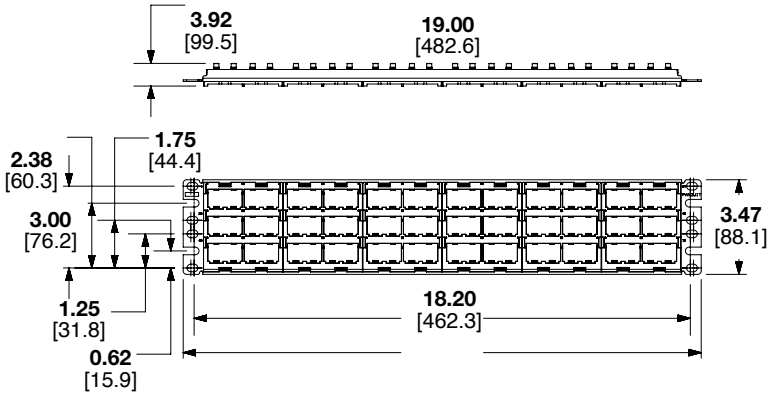

CPP48HDWBLY
CPP48HDWWH

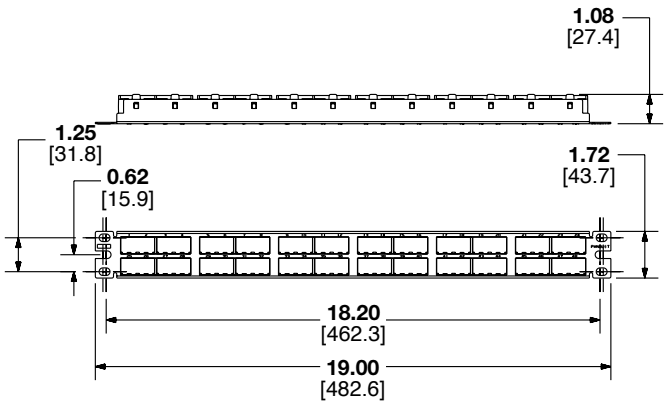

CPP48HDVNSWBL

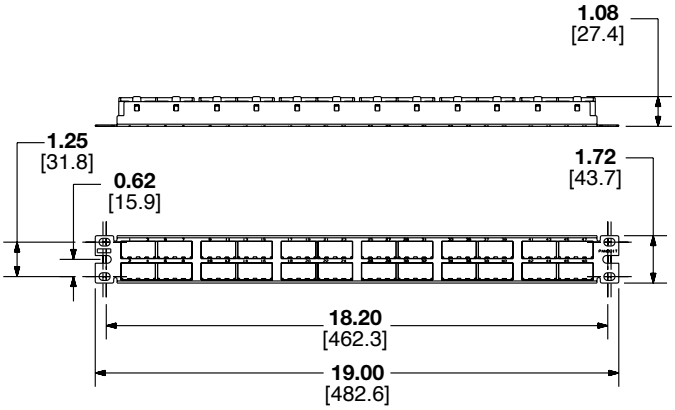

CPP48HDEWBL
CPP48HDEWWH

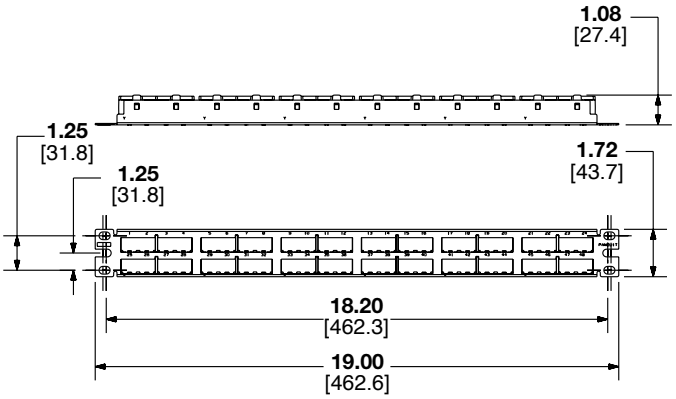

CPP72FMWBLY

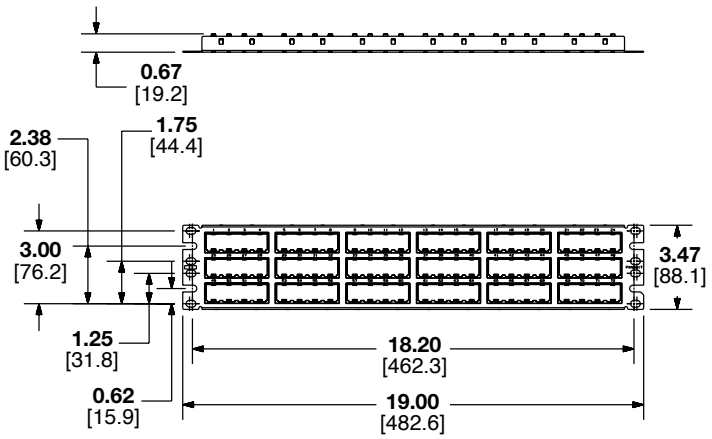

CPPA48HDWBLY
CPPA48HDWWH

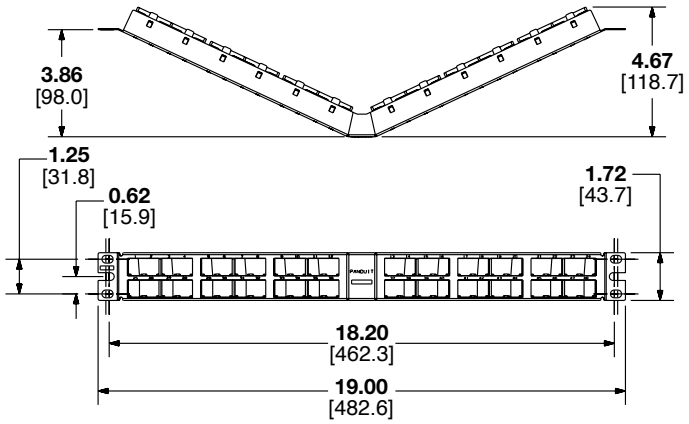

CPPA48HDEWBL
CPPA48HDEWWH

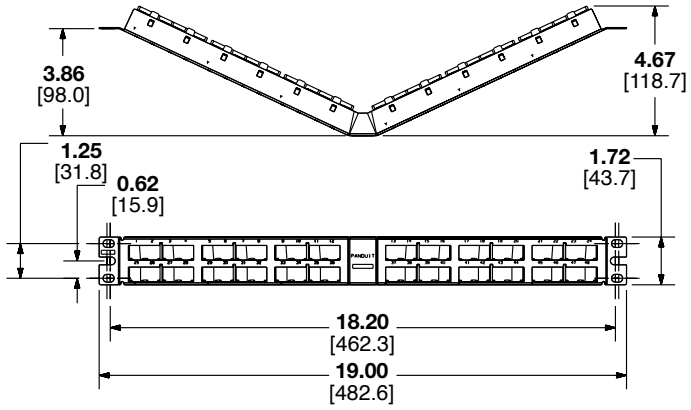

Mini-Com® High Density Modular Patch Panels

CPPA48HDVNSWBL

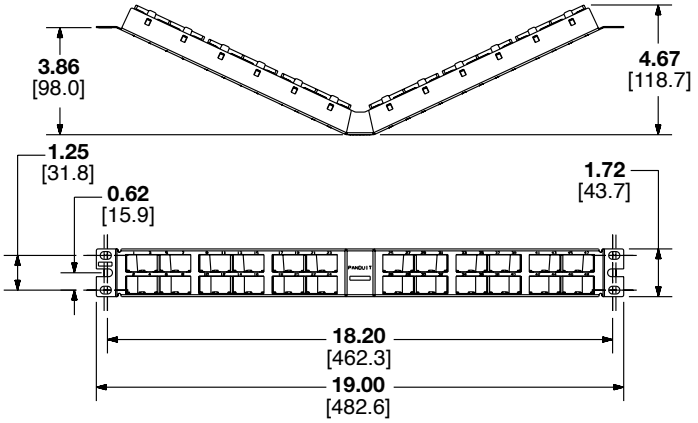

CPPA72FMWBLY

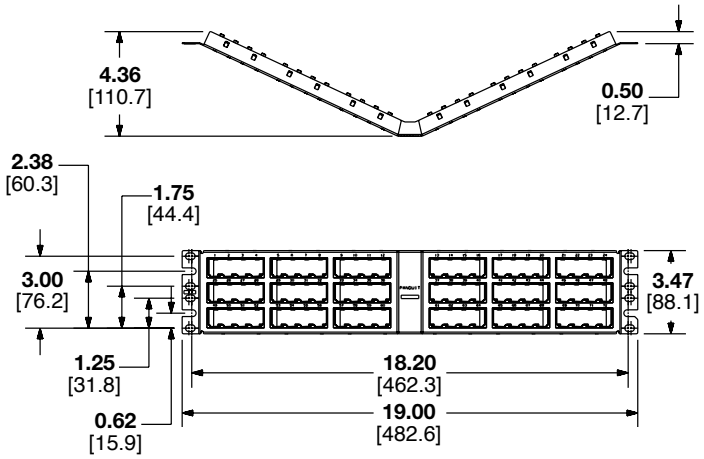

CPPLA72WBLY

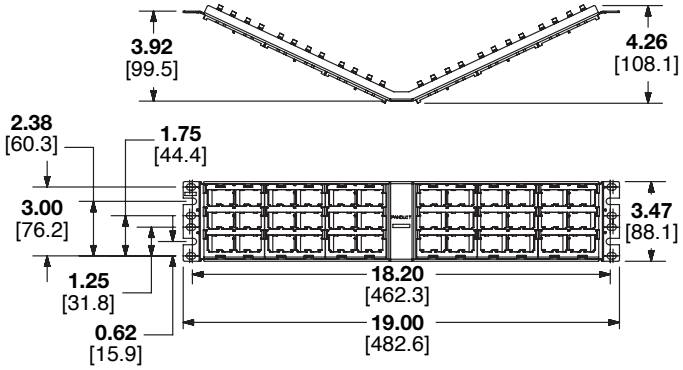

Dimensions are in inches. [Dimensions in brackets are metric].

WORLDWIDE SUBSIDIARIES AND SALES OFFICES

PANDUIT US/CANADA
Phone: 800.777.3300

PANDUIT EUROPE LTD.
London, UK
Phone: 44.20.8601.7200

PANDUIT SINGAPORE PTE. LTD.
Republic of Singapore
Phone: 65.6305.7575

PANDUIT JAPAN
Tokyo, Japan
Phone: 81.3.6863.6000

PANDUIT LATIN AMERICA
Guadalajara, Mexico
Phone: 52.33.3777.6000

PANDUIT AUSTRALIA PTY. LTD.
Victoria, Australia
Phone: 61.3.9794.9020

For a copy of Panduit product warranties, log on to www.panduit.com/warranty

For more information
Visit us at www.panduit.com
Contact Customer Service by email: cs@panduit.com
or by phone: 800.777.3300

© 2024 Panduit Corp.
ALL RIGHTS RESERVED.

COSP591-WW-ENG
4/2024