BALDOR
A MEMBER OF THE ABB GROUP

BALDOR • RELIANCE

Product Information Packet

M3458

.33HP,1725RPM,3PH,60HZ,48,3413M,TEFC,F1

Copyright © All product information within this document is subject to Baldor Electric Company copyright © protection, unless otherwise noted.

Part Detail							
Revision:	P	**Status:**	PRD/A	**Change #:**		**Proprietary:**	No
Type:	AC	**Prod. Type:**	3413M	**Elec. Spec:**	34WG0884	**CD Diagram:**	CD0005
Enclosure:	TEFC	**Mfg Plant:**		**Mech. Spec:**	34A051	**Layout:**	34LYA051
Frame:	48	**Mounting:**	F1	**Poles:**	04	**Created Date:**	
Base:	RG	**Rotation:**	R	**Insulation:**	B	**Eff. Date:**	03-10-2016
Leads:	9#18					**Replaced By:**	
Literature:		**Elec. Diagram:**					

BALDOR A MEMBER OF THE ABB GROUP

Nameplate NP1256L

CAT.NO.	M3458								
SPEC.	34A51-884								
HP	.33								
VOLTS	230/460								
AMP	1.6/.8								
RPM	1725								
FRAME	48			**HZ**	60			**PH**	3
SER.F.	1.35		**CODE**	M		**DES**	B	**CLASS**	B
NEMA-NOM-EFF	68		**PF**	57					
RATING	40C AMB-CONT								
CC							**USABLE AT 208V**	1.9	
DE	6203			**ODE**	6203				
ENCL	TEFC	**SN**							
	SFA 1.8/.9								

BALDOR
A MEMBER OF THE ABB GROUP

AC Induction Motor Performance Data

Record # 6610 - Typical performance - not guaranteed values

Winding: 34WG0884-R001	**Type:** 3413M	**Enclosure:** TEFC

Nameplate Data				460 V, 60 Hz: High Voltage Connection	
Rated Output (HP)	.33			Full Load Torque	1 LB-FT
Volts	230/460			Start Configuration	direct on line
Full Load Amps	1.6/.8			Breakdown Torque	4.7 LB-FT
R.P.M.	1725			Pull-up Torque	3.35 LB-FT
Hz	60	Phase	3	Locked-rotor Torque	3.75 LB-FT
NEMA Design Code	B	KVA Code	M	Starting Current	4.4 A
Service Factor (S.F.)	1.35			No-load Current	0.7 A
NEMA Nom. Eff.	68	Power Factor	57	Line-line Res. @ 25ºC	49.1 Ω
Rating - Duty	40C AMB-CONT			Temp. Rise @ Rated Load	47°C
S.F. Amps	1.8/.9			Temp. Rise @ S.F. Load	61°C

Load Characteristics 460 V, 60 Hz, 0.33 HP

% of Rated Load	25	50	75	100	125	150	S.F.
Power Factor	28	40	50	57	64	69	66
Efficiency	44	59	65	68	68	67	68
Speed	1788	1770	1760	1745	1730	1710	1725
Line amperes	0.7	0.73	0.77	0.8	0.85	1	0.9

BALDOR A MEMBER OF THE ABB GROUP

Performance Graph at 460V, 60Hz, 0.33HP Typical performance - Not guaranteed values

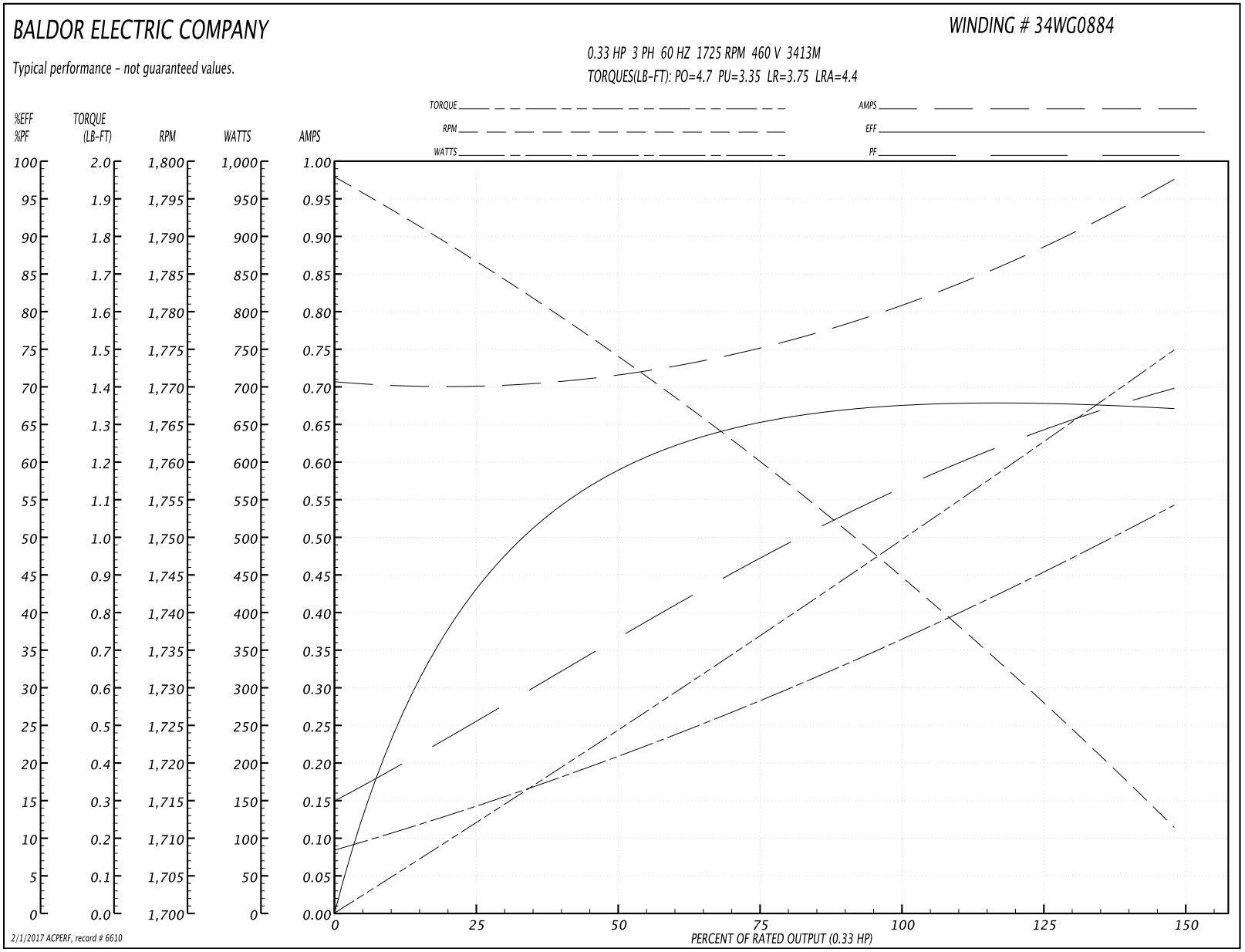

BALDOR
A MEMBER OF THE ABB GROUP

34LYA051

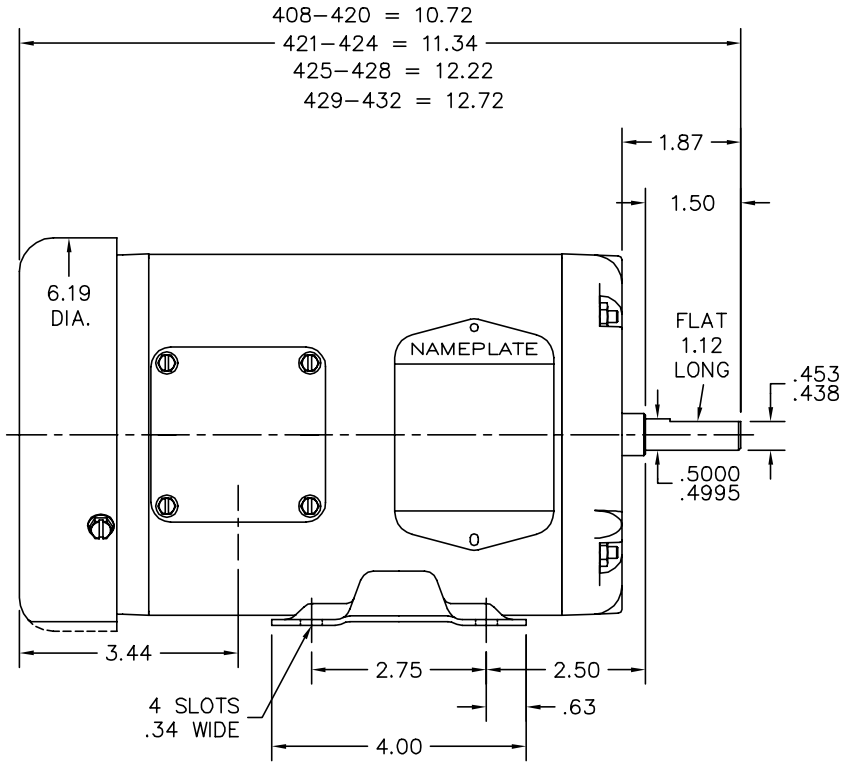

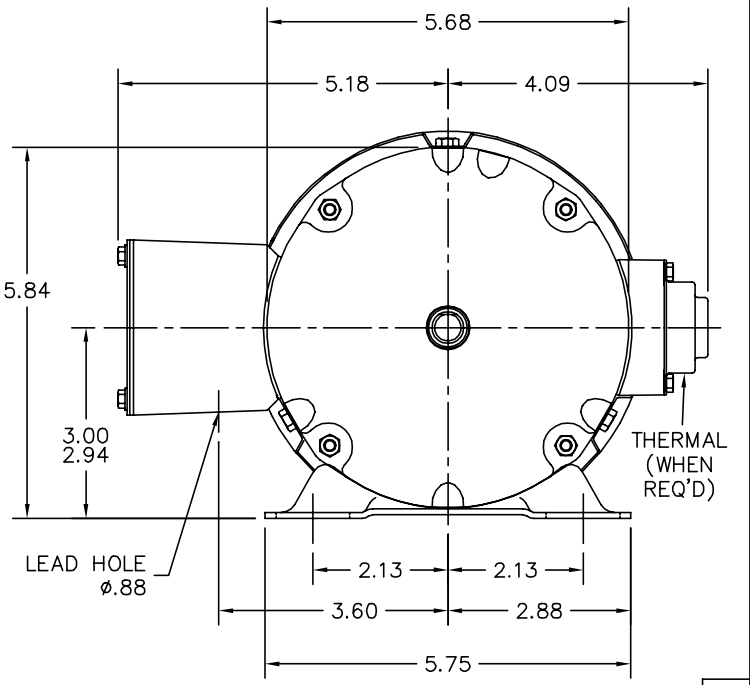

34LYA051

CUSTOMER IS RESPONSIBLE FOR DETERMINING THAT BALDOR'S PRODUCT WILL PERFORM SUITABLY IN THE INTENDED APPLICATION.

REV. DESC: CHG 34SH1174– TO 34SH1174		
REV. LTR: L	VERSION: 04	TDR: 000001004283
FILE: \AAA\00006\622	REVISED: 02:45:12 11/09/2016	BY: ENBENBO
MTL: –		

BALDOR

STD HORZ 34M NEMA 48 TEFC

SH 1 of 1

BALDOR
A MEMBER OF THE ABB GROUP

CD0005

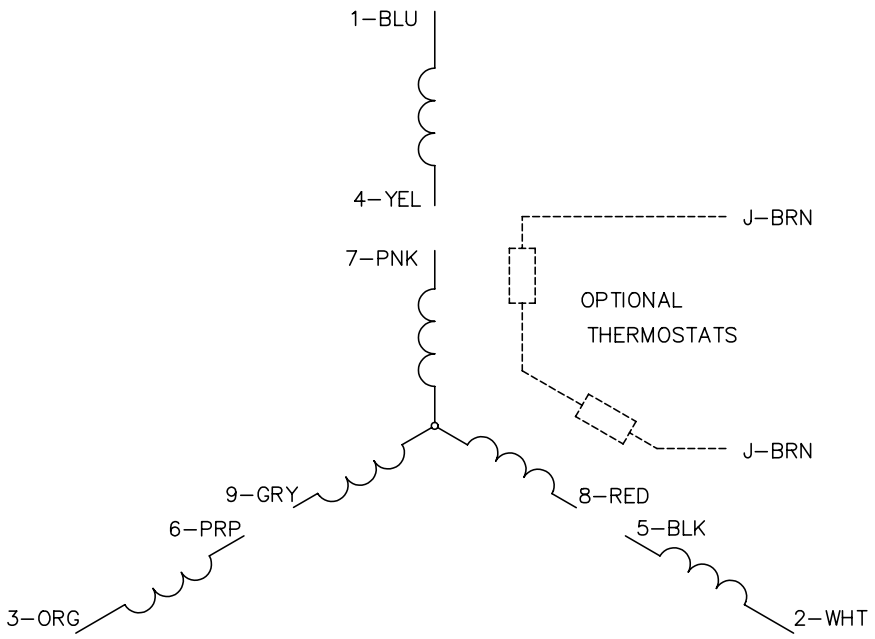

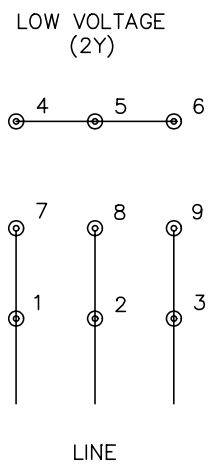

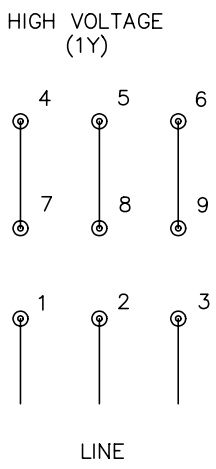

NOTES:

1. INTERCHANGE ANY TWO LINE LEADS TO REVERSE ROTATION.
2. OPTIONAL THERMOSTATS ARE PROVIDED WHEN SPECIFIED.
3. ACTUAL NUMBER OF INTERNAL PARALLEL CIRCUITS MAY BE A MULTIPLE OF THOSE SHOWN ABOVE.
4. LEAD COLORS ARE OPTIONAL. LEADS MUST ALWAYS BE NUMBERED AS SHOWN.

CD0005

REV. DESC: REVISE TO SHOW OPTIONAL COLORS			BALDOR ELECTRIC Co.
REV. LTR: E	BY: JLP	REVISED: 01/19/99 10:15	TDR: 0171435
CD0005		FILE: AAA00005140	MDL: –
		MTL: –	3PH, DV, 9 LEADS

BALDOR A MEMBER OF THE ABB GROUP