RAIL95W/D10/LOS



High efficiency. High output. High Bay RAIL.

Color: White

Weight: 10.2 lbs

Project:	**Type:**
Prepared By:	**Date:**

Driver Info

Type	Constant Current
120V	0.77A
208V	0.48A
240V	0.42A
277V	0.35A
Input Watts	91.3W

LED Info

Watts	95W
Color Temp	5000K (Cool)
Color Accuracy	84 CRI
L70 Lifespan	100,000 Hours
Lumens	12,252
Efficacy	134.2 lm/W

Technical Specifications

Compliance

UL Listed:

Suitable for damp locations

IESNA LM-79 & IESNA LM-80 Testing:

RAB LED luminaires and LED components have been tested by an independent laboratory in accordance with IESNA LM-79 and LM-80.

DLC Listed:

This product is listed by Design Lights Consortium (DLC) as an ultra-efficient premium product that qualifies for the highest tier of rebates from DLC Member Utilities.
DLC Product Code: P4EPSP6H

Performance

Lifespan:

100,000-Hour LED lifespan based on IES LM-80 results and TM-21 calculations

LED Characteristics

LEDs:

Long-life, high-efficacy, surface-mount LEDs

Color Stability:

LED Color temperature is warrantied to shift no more than 200K in color temperature over a 5-year period

Color Uniformity:

RAB's range of Correlated Color Temperature follows the guidelines of the American National Standard for Specifications for the Chromaticity of Solid State Lighting (SSL) Products, ANSI C78.377-2017.

Construction

Maximum Ambient Temperature:

Suitable for use 12 hours a day, 6 days a week in 60°C (140°F). Suitable for 24/7 use in up to 50°C (122°F).

Housing:

Extruded aluminum

Lens:

High-transmittance polystyrene

Reflector:

Specular, high-reflectance aluminum with 95% reflectivity

Mounting:

3/4" NPS for pendant mount (pendant by others) or direct surface knockout on junction box for mounting to ceiling. Mounting hardware (not provided) should be suitable to mounting surface.

Other

LOSBAY800 Sensor:

Occupancy/Motion Sensor. Sensors can automatically affect the operation of lighting equipment based upon detecting the presence of people in a space. "/LOS" for use with base fixture only. 360° White Lens (Installed) - 60 ft. diameter when mounted at 40 ft., Aisle Black Lens (included as option) - 60 ft. x 20 ft. wide.

Replacement:

Replaces 100-250W MH

Copyright © 2022 RAB Lighting All Rights Reserved Note: Specifications are subject to change at any time without notice

Technical Specifications (continued)

Other

Warranty:

RAB warrants that our LED products will be free from defects in materials and workmanship for a period of five (5) years from the date of delivery to the end user, including coverage of light output, color stability, driver performance and fixture finish. RAB's warranty is subject to all terms and conditions found at rablighting.com/warranty.

Trade Agreements Act Compliant:

This product is a product of Cambodia and a "designated country" end product that complies with the Trade Agreements Act

Buy American Act Compliance:

RAB values USA manufacturing! Upon request, RAB may be able to manufacture this product to be compliant with the Buy American Act (BAA). Please contact customer service to request a quote for the product to be made BAA compliant.

Electrical

Driver:

One Driver, Class 2, Constant Current, 100-277VAC, 50-60Hz, 4kV, 1.1A,

THD:

4.25% at 120V, 8.58% at 277V

Power Factor:

99.9% at 120V, 96.5% at 277V

Dimensions

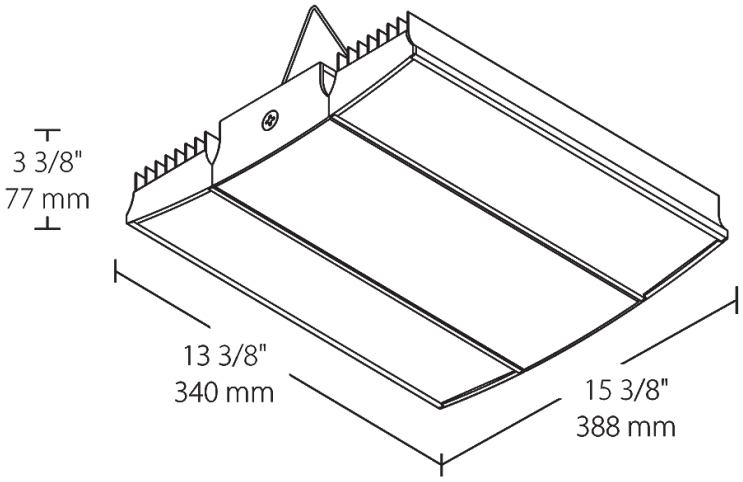

Features

- Ideal for large spaces
- 100,000-hour lifespan - virtually maintenance free operation
- 0-10V driver for variable dimming down to 10%
- Low-glare design with semi-diffuse lens

Ordering Matrix

Family	Wattage	Color Temp	Finish	Driver Options	Control Options	Other Options
RAIL	95		W	/D10	/LOS	
	95 = 95W **150 =** 150W **185 =** 185W **225 =** 225W **400 =** 400W	**Blank =** 5000K Cool **N =** 4000K Neutral **YN =** 3500K Warm Neutral	**W =** White	**/D10 =** 120-277V, 0-10V Dim **/480/D10 =** 480V, 0-10V Dim	**/LC/E2 =** Lightcloud® Controller w/ Battery Pack [2] **Blank =** No Option **/BL =** Bi-Level Control **/WS2 =** Multi-Level Motion Sensor 20 ft. [1] **/WS4 =** Multi-Level Motion Sensor 40 ft. [1] **/LOS =** LOSBAY 800 Sensor **/LC =** Lightcloud® Controller **/LCS =** Lightcloud® Sensor **/E2 =** Battery Pack	**Blank =** Standard **USA =** BAA Compliant

[1] *WS2 with 20' lens only available for 95 and 150W models; WS4 with 40' lens only available for 185 and 225W models. Both sensors only available with /D10 dimming drivers, but not with 480V driver.*

[2] *Not available in RAIL 400W*

Copyright © 2022 RAB Lighting All Rights Reserved Note: Specifications are subject to change at any time without notice