Twist-Lock® Devices

20A, 250V AC, 2 Pole, 3 Wire Grounding

Single Flush Receptacle

HUBBELL

Features

- High-impact, abuse-resistant nylon face
- Wire restraint recess for both back and side wiring, greatly reduces the possibility of loosening the terminal connection
- Face color coding by voltage facilitates locating and mating of proper devices
- All-brass mounting and grounding system provides a lower resistance ground path and greater resistance to corrosion than steel mounting systems



20A 250V
NEMA L6-20R
UL/CSA
2 HP



Ordering Information

Description	Device Color	UPC	Catalog Number
Nylon face, back and side wire.	Black	783585235585	**HBL2320**

Listings

Listed to UL 498
Fed.Spec. W-C-596
Certified to CSA C22.2 No.42

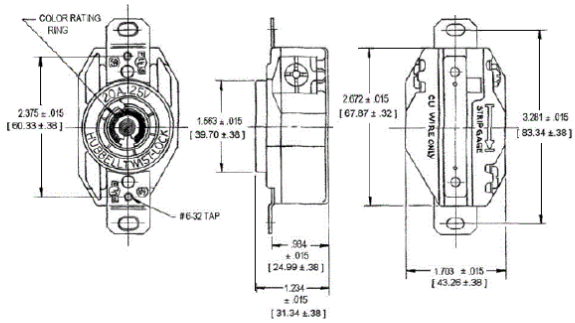

Specifications

Face	Nylon
Base	Glass-Reinforced thermoplastic polyester (RTP)
Contacts	Brass
Terminal Screws	#10 - 32 Brass
Mounting Strap	Brass

Performance

Electrical	
Current Interrupting	Certified for current interrupting at full rated current
Dielectric Voltage	Withstands 2,000V minimum
Mechanical	
Terminal Accommodation	#16 AWG - #8 AWG solid or stranded copper wire only.
Terminal Identification	Terminals identified in accordance with UL 498
Environmental	
Flammability	V2 or better per UL94/CSA 22.2 No.0.17
Moisture Resistance	IP20 Suitability
Operating Temperatures	Maximum Continuous 75°C; Minimum -40°C (w/o impact)

Complementary Products

Plug	HBL2321
Wallplate or Weatherproof Cover	1.60" Opening
Switched Enclosure	SETL3

Online Resources

Customer Use Drawing
eCatalog
Installation Instructions

Dimensions in Inches (mm)

Hubbell Wiring Device-Kellems • Hubbell Incorporated (Delaware) • 40 Waterview Drive • Shelton, CT 06484
Phone (800) 288-6000 • Fax (800) 255-1031 • Specifications subject to change without notice.

HUBBELL® Wiring Device-Kellems