THIS COPY IS PROVIDED ON A RESTRICTED BASIS AND IS NOT TO BE USED IN ANY WAY DETRIMENTAL TO THE INTERESTS OF PANDUIT CORP.

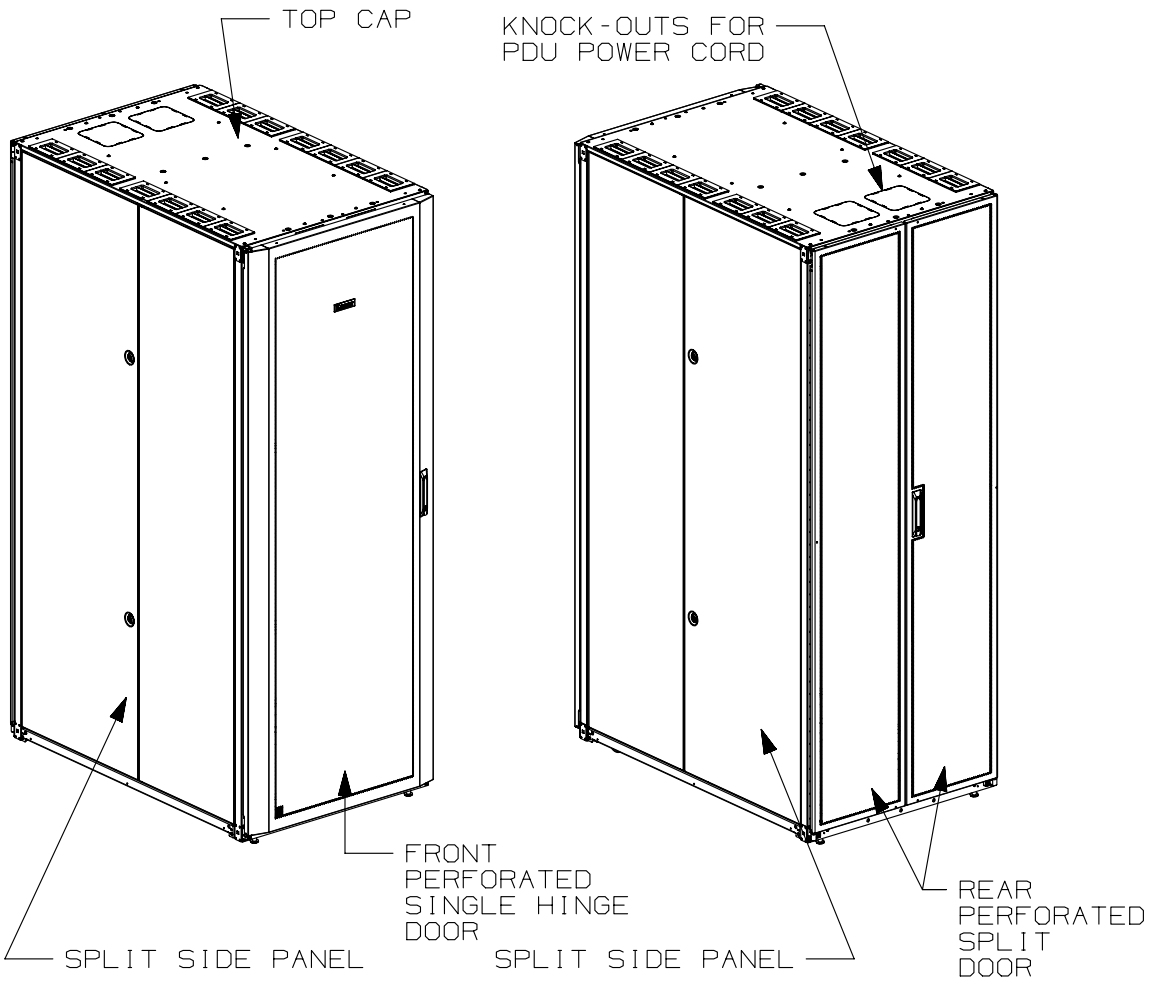

1. VISIT OUR ON-LINE CATALOG AT WWW.PANDUIT.COM FOR A LIST OF CURRENT PARTS APPLICABLE FOR USE WITH THIS PRODUCT.
2. PRIMARY DIMENSIONS ARE IN MILLIMETERS.
3. FACTORY SETTINGS:
   -FRONT FACE OF FRONT E-RAILS ARE 167mm [6.57in] FROM FRONT FACE OF FRAME.
   -FRONT FACE OF REAR E-RAILS ARE 412.75mm [16.25in] FROM FRONT FACE OF FRONT E-RAILS.
4. ADJUSTMENTS:
   RAIL ADJUSTMENT MEASUREMENTS ARE TAKEN FROM THE FRONT FACE OF EACH EQUIPMENT RAIL.
   -FRONT E-RAILS CAN ADJUST AS FAR FORWARD AS 167mm [6.57in] FROM FRONT FACE OF FRAME.
   -WHEN FRONT E-RAILS ARE 167mm [6.57in] FROM FRONT FACE OF FRAME, REAR E-RAILS CAN ADJUST FROM 62mm [2.44in] TO 423mm [16.65in] AND FROM 473mm [18.62in] TO 975mm [38.38in].
5. CAN BE USED WITH ANY 19" EIA STANDARD COMPONENT IN ADDITION TO ALL PANDUIT HORIZONTAL CABLE MANAGEMENT AND PATCH PANEL PRODUCTS.
6. EIA UNIVERSAL STANDARD HOLE PROGRESSION ON EQUIPMENT RAILS 15.88mm [.625in], 15.88mm [.625in], 12.70mm [.5in], 15.88mm [.625in], 15.88mm [.625in], 12.70mm [.5in]...ETC.
7. PARTS SUPPLIED:
   -BASE CABINET
   -FRONT PERFORATED SINGLE HINGE DOOR (SEE CHART ON SHEET 2)
   -REAR PERFORATED SPLIT DOOR (SEE CHART ON SHEET 2)
   -SPLIT SIDE PANELS (SEE CHART ON SHEET 2)
   -CAGE NUT UTILITY STYLE EQUIPMENT RAILS FRONT AND REAR (SEE CHART ON SHEET 2)
   -CABLE MANAGEMENT FINGERS (SEE CHART ON SHEET 2)
   -CABINET HARDWARE KIT
   -INSTRUCTION SHEET
8. RACK UNIT SPACING NUMERALS ARE CLEARLY PRINTED ON EQUIPMENT MOUNTING RAILS.
9. FULLY BONDED STRUCTURE WHEN ASSEMBLED PER INSTRUCTIONS.
10. STATIC LOAD RATING. 1360 Kg(3000 LBS)
11. ROLLING LOAD RATING. 1133 Kg (2500 LBS)
12. SINGLE POINT GROUND LOCATIONS AT TOP AND BOTTOM OF CABINET.
13. ALL CABINET RAILS ARE INSTALLED NUMBERS UP.

REV	DATE	BY	CHK	APR	DESCRIPTION	ECN
01A	12-02-14	MDCA	ADP	TCN	FLOOR MOUNT DIMENSIONS UPDATED	V09000BX
00A	6-07-13	PBS	JDW	JDWE	RELEASED TO PRODUCTION	12V352BV-DC

TITLE
NET-ACCESS S TYPE UTILITY CABINET 800mm WIDE X 1200mm DEEP FAMILY
CUSTOMER DRAWING

ITEM REVISION NAME: 12V352BV/01.PRT

DATASET FILE NAME: 12V352BV_DC/01A.PRT

PANDUIT

MATERIAL: N/A

THIRD ANGLE PROJECTION

DRAWING NUMBER: 12V352BV-DC

DRAWN BY	DATE	CHK	SCALE	SHT 1 OF 5	SIZE
PBS	6-07-13	JDW	NONE		A

THIS COPY IS PROVIDED ON A RESTRICTED BASIS AND IS NOT TO BE USED IN ANY WAY DETRIMENTAL TO THE INTERESTS OF PANDUIT CORP.

PART NO.	DESCRIPTION	SINGLE HINGE FRONT DOOR	SPLIT REAR DOOR	SPLIT SIDE PANEL	ADJUSTABLE FRONT UTILITY E-RAILS	REAR CAGE NUT FINGER MGMT E-RAILS	STANDARD PDU BRACKETS	CASTERS	CABLE MGMT FINGERS	CABINET WEIGHT FULLY UNPACKAGED	CABINET WEIGHT SHIPPING WEIGHT
S8222*A	NET-ACCESS S-TYPE CABINET 800mm X 42RU X 1200mm DEEP	01	01	02	02	02	00	04	01	152 Kg/EACH 335 LBS/EACH	172 Kg/EACH 380 LBS/EACH
S8522*A	NET-ACCESS S-TYPE CABINET 800mm X 45RU X 1200mm DEEP	01	01	02	02	02	00	04	01	165 Kg/EACH 365 LBS/EACH	186 Kg/EACH 410 LBS/EACH
S8822*A	NET-ACCESS S-TYPE CABINET 800mm X 48RU X 1200mm DEEP	01	01	02	02	02	00	04	01	179 Kg/EACH 395 LBS/EACH	199 Kg/EACH 440 LBS/EACH
S8229*A	NET-ACCESS S-TYPE CABINET 800mm X 42RU X 1200mm DEEP	01	01	00	02	02	00	04	01	112 Kg/EACH 248 LBS/EACH	133 Kg/EACH 293 LBS/EACH
S8529*A	NET-ACCESS S-TYPE CABINET 800mm X 45RU X 1200mm DEEP	01	01	00	02	02	00	04	01	119 Kg/EACH 263 LBS/EACH	140 Kg/EACH 308 LBS/EACH
S8829*A	NET-ACCESS S-TYPE CABINET 800mm X 48RU X 1200mm DEEP	01	01	00	02	02	00	04	01	126 Kg/EACH 278 LBS/EACH	146 Kg/EACH 323 LBS/EACH

* DENOTES COLOR
"B" = BLACK
"W" = WHITE

REV	DATE	BY	CHK	APR	DESCRIPTION	ECN
01A	12-02-14	MDCA	ADP	TCN	SEE SHEET 1 OF 5 FOR REVISIONS	V09000BX
00A	6-07-13	PBS	JDW	JDWE	SEE SHEET 1 OF 5 FOR REVISIONS	12V352BV-DC

TITLE
NET-ACCESS S TYPE UTILITY CABINET 800mm WIDE X 1200mm DEEP FAMILY
CUSTOMER DRAWING

ITEM REVISION NAME
12V352BV/01.PRT

DATASET FILE NAME
12V352BV_DC/01A.PRT

PANDUIT

MATERIAL:
N/A

THIRD ANGLE PROJECTION

DRAWING NUMBER:
12V352BV-DC

DRAWN BY	DATE	CHK	SCALE	SHT 2 OF 5	SIZE
PBS	6-07-13	JDW	NONE		A

THIS COPY IS PROVIDED ON A RESTRICTED BASIS AND IS NOT TO BE USED IN ANY WAY DETRIMENTAL TO THE INTERESTS OF PANDUIT CORP.

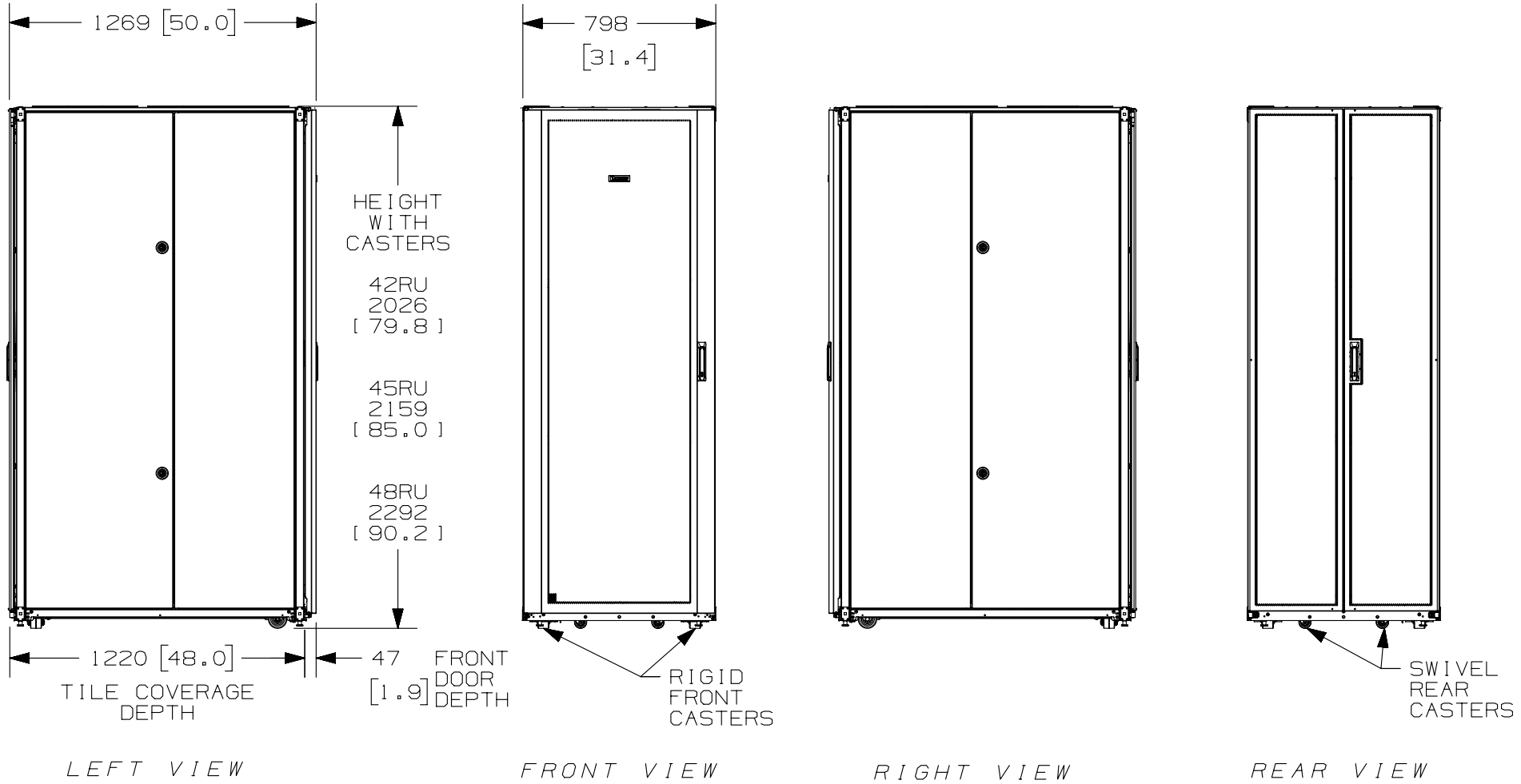

REV	DATE	BY	CHK	APR	DESCRIPTION	ECN
01A	12-02-14	MDCA	ADP	TCN	SEE SHEET 1 OF 5 FOR REVISIONS	V09000BX
00A	6-07-13	PBS	JDW	JDWE	SEE SHEET 1 OF 5 FOR REVISIONS	12V352BV-DC

TITLE

NET-ACCESS S TYPE UTILITY CABINET 800mm WIDE X 1200mm DEEP FAMILY

CUSTOMER DRAWING

ITEM REVISION NAME: 12V352BV/01.PRT

DATASET FILE NAME: 12V352BV_DC/01A.PRT

PANDUIT

MATERIAL: N/A

THIRD ANGLE PROJECTION

DRAWING NUMBER: 12V352BV-DC

DRAWN BY	DATE	CHK	SCALE	SHT 3 OF 5	SIZE
PBS	6-07-13	JDW	NONE		A

THIS COPY IS PROVIDED ON A RESTRICTED BASIS AND IS NOT TO BE USED IN ANY WAY DETRIMENTAL TO THE INTERESTS OF PANDUIT CORP.

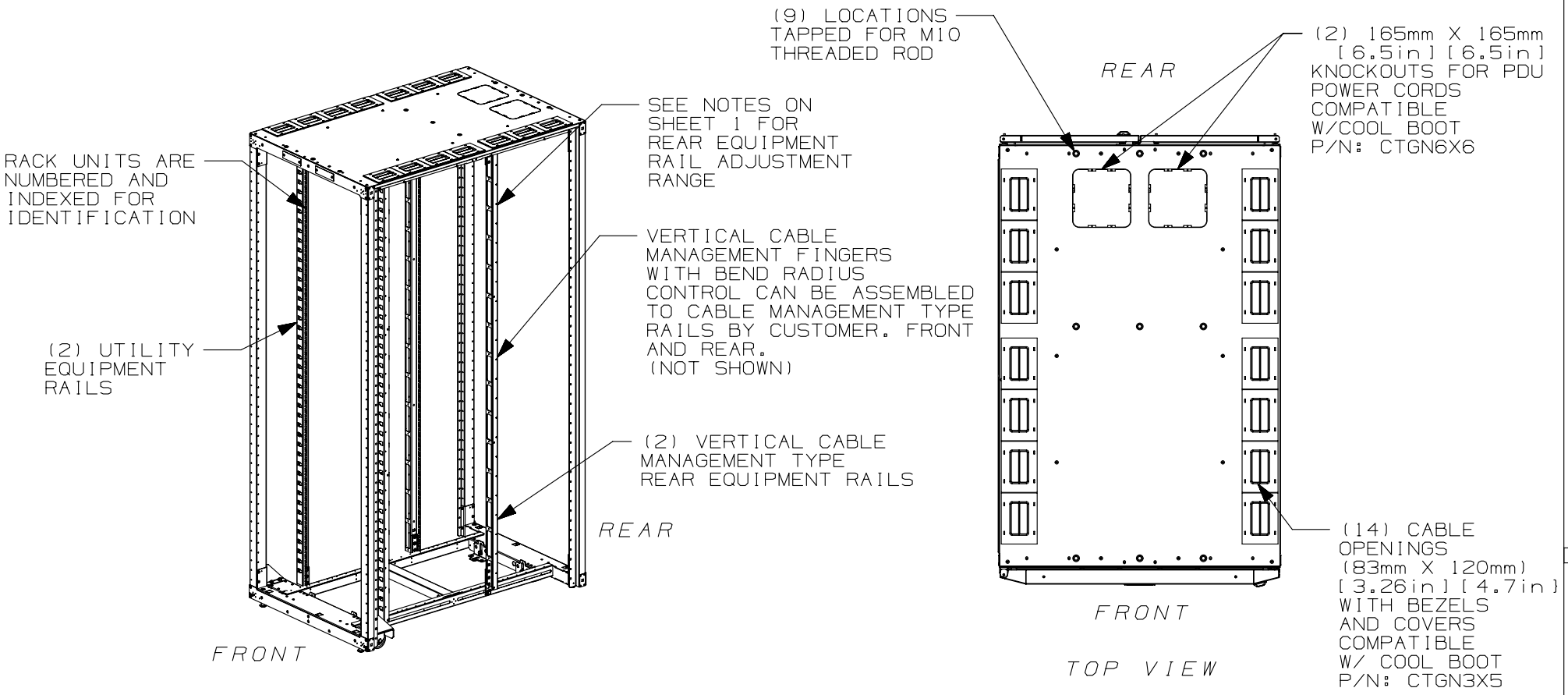

FRONT DOOR, REAR DOOR, AND SIDE PANELS NOT SHOWN

REV	DATE	BY	CHK	APR	DESCRIPTION	ECN
01A	12-02-14	MDCA	ADP	TCN	SEE SHEET 1 OF 5 FOR REVISIONS	V09000BX
00A	6-07-13	PBS	JDW	JDWE	SEE SHEET 1 OF 5 FOR REVISIONS	12V352BV-DC

TITLE

NET-ACCESS S TYPE UTILITY CABINET 800mm WIDE X 1200mm DEEP FAMILY

CUSTOMER DRAWING

ITEM REVISION NAME: 12V352BV/01.PRT

DATASET FILE NAME: 12V352BV_DC/01A.PRT

PANDUIT

MATERIAL: N/A

THIRD ANGLE PROJECTION

DRAWING NUMBER: 12V352BV-DC

DRAWN BY	DATE	CHK	SCALE	SHT	SIZE
PBS	6-07-13	JDW	NONE	SHT 4 OF 5	A

THIS COPY IS PROVIDED ON A RESTRICTED BASIS AND IS NOT TO BE USED IN ANY WAY DETRIMENTAL TO THE INTERESTS OF PANDUIT CORP.

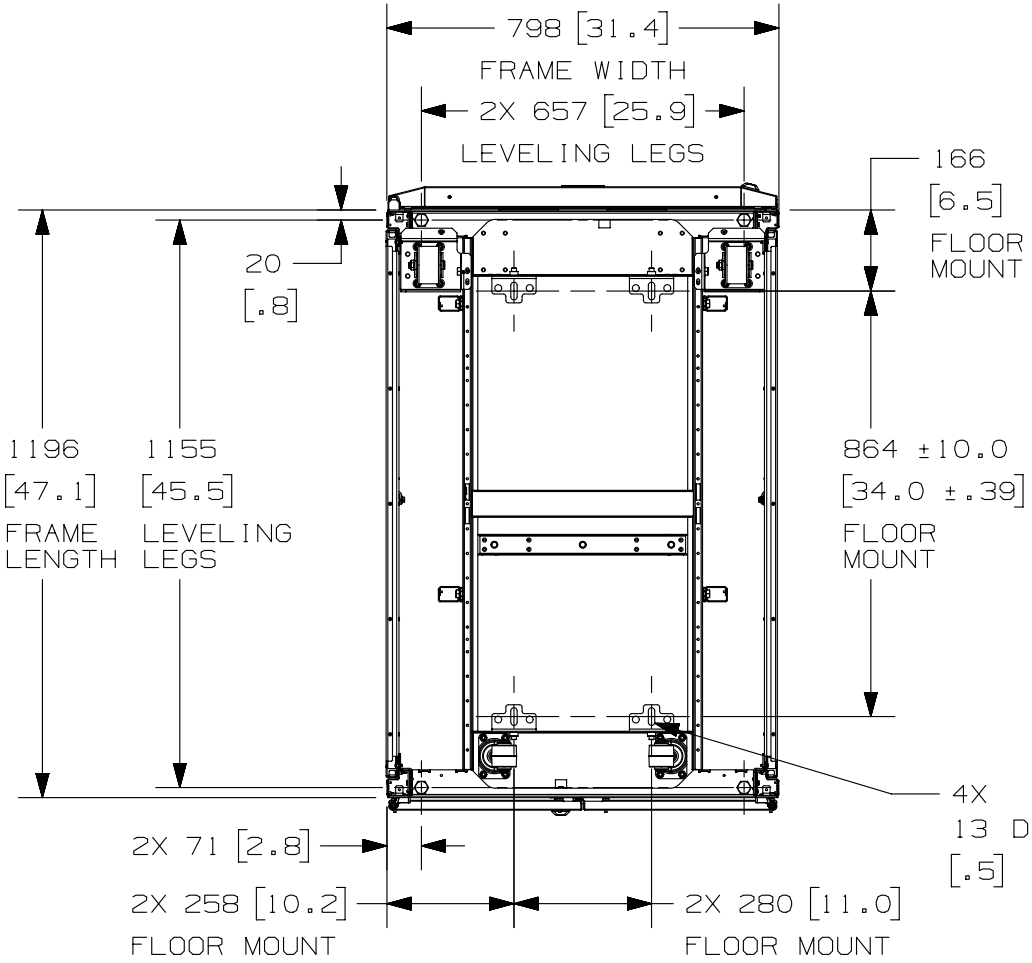

REAR OF CABINET
BOTTOM VIEW

FLOOR MOUNTING HOLE LOCATIONS-
SOME PARTS REMOVED FOR CLARITY

REV	DATE	BY	CHK	APR	DESCRIPTION	ECN
01A	12-02-14	MDCA	ADP	TCN	SEE SHEET 1 OF 5 FOR REVISIONS	V09000BX
00A	6-07-13	PBS	JDW	JDWE	SEE SHEET 1 OF 5 FOR REVISIONS	12V352BV-DC

TITLE

NET-ACCESS S TYPE UTILITY
CABINET 800mm WIDE X 1200mm DEEP FAMILY

CUSTOMER DRAWING

ITEM REVISION NAME
12V352BV/01.PRT

DATASET FILE NAME
12V352BV_DC/01A.PRT

PANDUIT

MATERIAL:
N/A

THIRD ANGLE PROJECTION

DRAWING NUMBER:
12V352BV-DC

DRAWN BY	DATE	CHK	SCALE	SHT 5 OF 5	SIZE
PBS	6-07-13	JDW	NONE		A