BALDOR
A MEMBER OF THE ABB GROUP

BALDOR • RELIANCE

Product Information Packet

VEM3554T

1.5HP,1760RPM,3PH,60HZ,145TC,3526M,TEFC

Copyright © All product information within this document is subject to Baldor Electric Company copyright © protection, unless otherwise noted.

Part Detail							
Revision:	J	**Status:**	PRD/A	**Change #:**		**Proprietary:**	No
Type:	AC	**Prod. Type:**	3526M	**Elec. Spec:**	35WGM493	**CD Diagram:**	CD0005
Enclosure:	TEFC	**Mfg Plant:**		**Mech. Spec:**	35A003	**Layout:**	35LYA003
Frame:	145TC	**Mounting:**	F1	**Poles:**	04	**Created Date:**	06-13-2011
Base:	N	**Rotation:**	R	**Insulation:**	F	**Eff. Date:**	10-16-2015
Leads:	9#18					**Replaced By:**	
Literature:		**Elec. Diagram:**					

BALDOR
A MEMBER OF THE ABB GROUP

Nameplate NP3441LUA

CAT.NO.	VEM3554T								
SPEC.	35A003M493G1								
HP	1.5								
VOLTS	230/460								
AMP	4.4/2.2								
RPM	1760								
FRAME	145TC		**HZ**	60			**PH**	3	
SER.F.	1.15	**CODE**	L	**DES**	B	**CL**	F		
NEMA-NOM-EFF	86.5	**PF**	73						
RATING	40C AMB-CONT								
CC	010A			**USABLE AT 208V**	4.5				
DE	6205		**ODE**	6203					
ENCL	TEFC	**SN**							
VPWM INVERTER READY									
CT6-60H(10:1)VT3-60H(20:1									
	50Hz 1.5HP 190/380V 5/2.5A								SF1.0

BALDOR A MEMBER OF THE ABB GROUP

AC Induction Motor Performance Data

Record # 32424 - Typical performance - not guaranteed values

Winding: 35WGM493-R001	**Type:** 3526M	**Enclosure:** TEFC

Nameplate Data				460 V, 60 Hz: High Voltage Connection	
Rated Output (HP)	1.5			Full Load Torque	4.47 LB-FT
Volts	208-230/460			Start Configuration	direct on line
Full Load Amps	4.5-4.4/2.2			Breakdown Torque	19.2 LB-FT
R.P.M.	1760			Pull-up Torque	9.4 LB-FT
Hz	60	Phase	3	Locked-rotor Torque	13.4 LB-FT
NEMA Design Code	B	KVA Code	L	Starting Current	18.3 A
Service Factor (S.F.)	1.15			No-load Current	1.37 A
NEMA Nom. Eff.	86.5	Power Factor	73	Line-line Res. @ 25ºC	10.66 Ω
Rating - Duty	40C AMB-CONT			Temp. Rise @ Rated Load	44°C
S.F. Amps				Temp. Rise @ S.F. Load	53°C
				Locked-rotor Power Factor	52
				Rotor inertia	0.154 LB-FT2

Load Characteristics 460 V, 60 Hz, 1.5 HP

% of Rated Load	25	50	75	100	125	150	S.F.
Power Factor	31	51	65	73	79	83	77
Efficiency	75.9	84.5	86.8	87.1	86.4	85.4	86.7
Speed	1790.6	1781.1	1770.7	1760.1	1748.1	1734.9	1753
Line amperes	1.44	1.61	1.86	2.19	2.58	2.98	2.42

BALDOR A MEMBER OF THE ABB GROUP

Performance Graph at 460V, 60Hz, 1.5HP Typical performance - Not guaranteed values

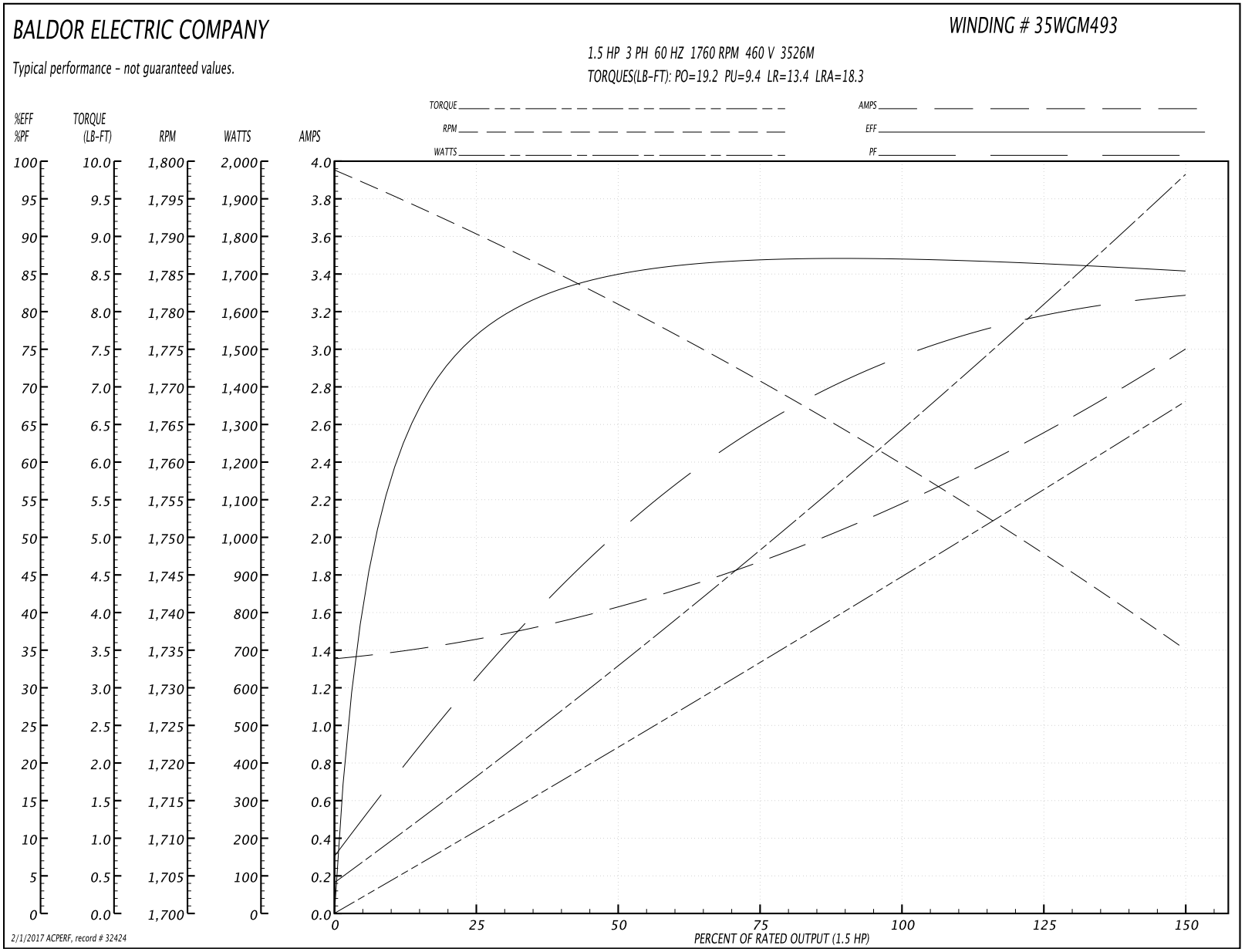

BALDOR
A MEMBER OF THE ABB GROUP

35LYA003

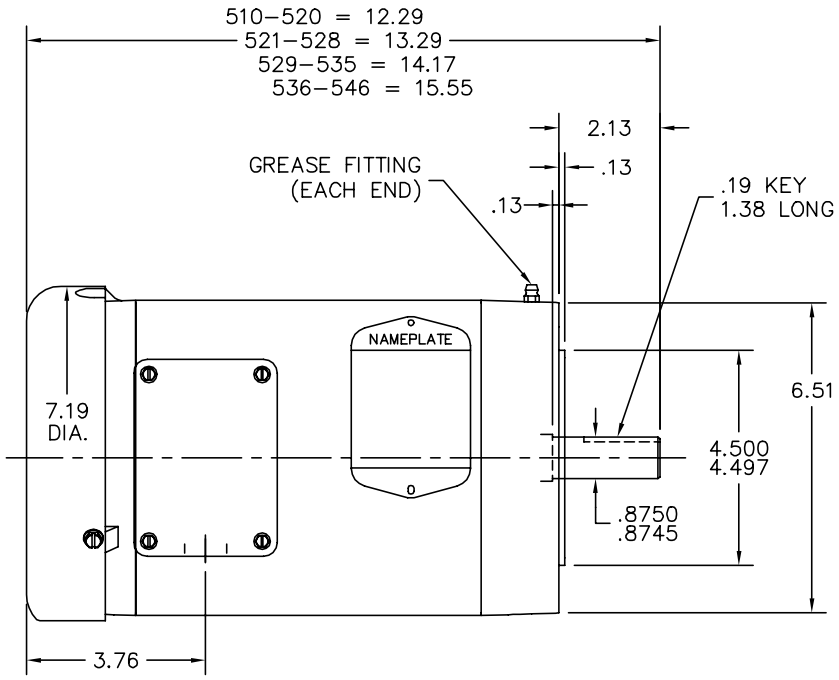

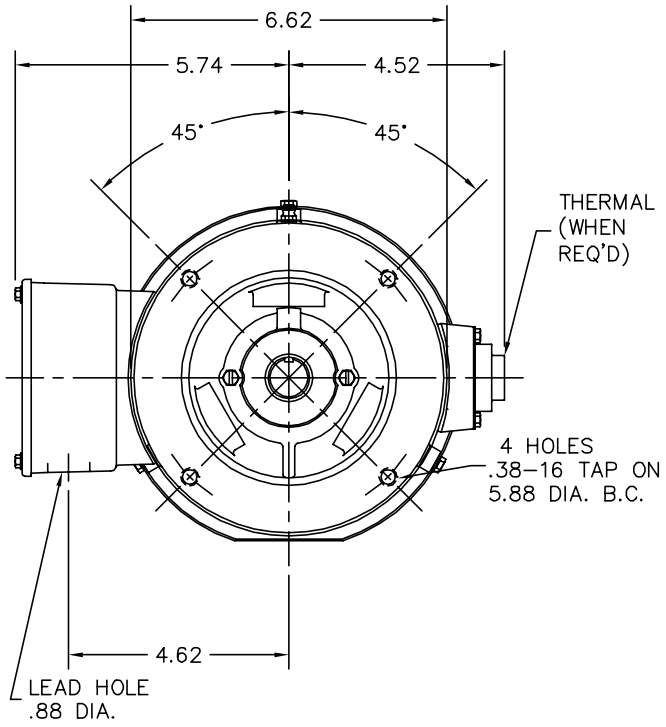

35LYA003

CUSTOMER IS RESPONSIBLE FOR DETERMINING THAT BALDOR'S PRODUCT WILL PERFORM SUITABLY IN THE INTENDED APPLICATION.

REV. DESC: CORRECT FAN HOUSING			BALDOR • DODGE • RELIANCE
REV. LTR: M	VERSION: 05	TDR: 000000498747	
FILE: \AAA\00004\893		REVISED: 10:40:10 05/04/2009	STD VERT 143–5TC TEFC 35M
MTL: –		BY: ENBRAM0	SH 1 of 1

BALDOR A MEMBER OF THE ABB GROUP

CD0005

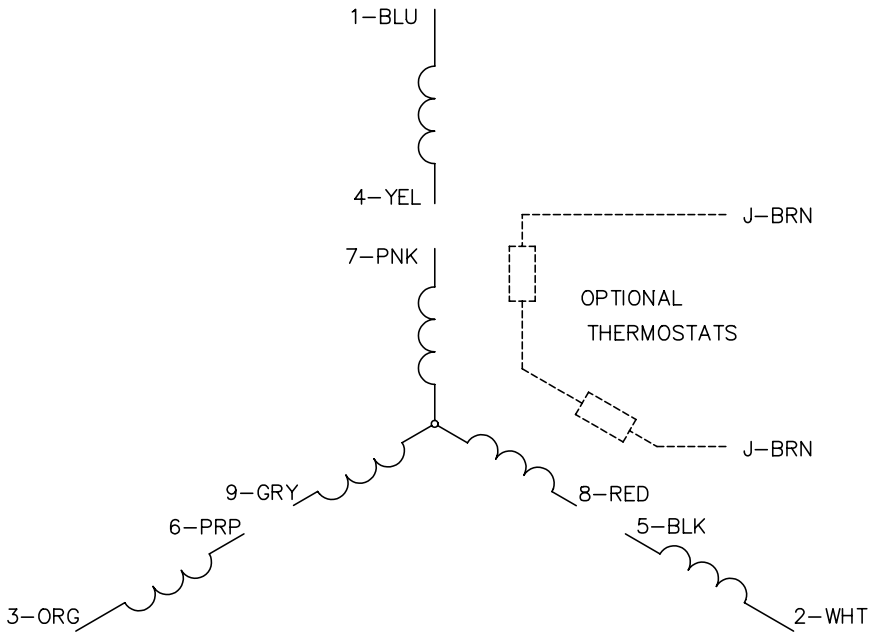

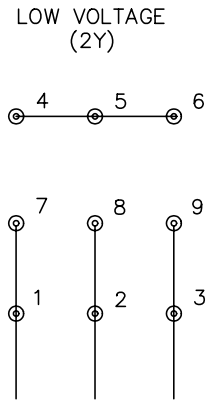

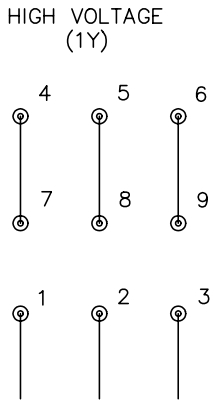

NOTES:

1. INTERCHANGE ANY TWO LINE LEADS TO REVERSE ROTATION.
2. OPTIONAL THERMOSTATS ARE PROVIDED WHEN SPECIFIED.
3. ACTUAL NUMBER OF INTERNAL PARALLEL CIRCUITS MAY BE A MULTIPLE OF THOSE SHOWN ABOVE.
4. LEAD COLORS ARE OPTIONAL. LEADS MUST ALWAYS BE NUMBERED AS SHOWN.

CD0005

REV. DESC: REVISE TO SHOW OPTIONAL COLORS			BALDOR ELECTRIC Co.
REV. LTR: E	BY: JLP	REVISED: 01/19/99 10:15	TDR: 0171435
CD0005		FILE: AAA00005140	MDL: –
		MTL: –	3PH, DV, 9 LEADS

BALDOR A MEMBER OF THE ABB GROUP