Straight Blade Devices
15A, 125V, 2 Pole, 3 Wire Grounding
# HBL® Extra Heavy Duty Hospital Grade Duplex Receptacle

HUBBELL

## Features

- Deep body design with circuit ID face
- Patented ground contact provides redundant grounding
- Unique bypass contact design



## Ordering Information

| Description | Device Color | UPC | Catalog Number |
|---|---|---|---|
| Deep body design with circuit ID face. Back and side wired. | White | 783585435688 | HBL8200W |

## Listings

UL Listed to UL498 File No. E2186
Certified to CSA 22.2, No. 42 File 285
Fed. Spec. W-C-596
NEMA® WD-6 Compliant

## Specifications

| | |
|---|---|
| Face | PBT |
| Base | PBT |
| By-Pass Power Contacts | .036". (.9) Nickel plated brass |
| Ground Contacts | Brass |
| Clamping Plate | Nickel plated brass |
| Terminal Screws | Plated brass |
| Mounting Strap | Nickel plated brass |
| Automatic Self-grounding Clip | Stainless steel |
| Mounting Screws | Stainless steel |

## Performance

**Electrical**

| | |
|---|---|
| Current Interrupting | Certified for current interrupting at full rated current |
| Dielectric Voltage | Withstands 2,000V minimum |

**Mechanical**

| | |
|---|---|
| Product Identification | Ratings are a permanent part of the device |
| Terminal Accommodation | #14-#10 AWG copper stranded or solid conductor only |
| Terminal Identification | Terminals identified in accordance with UL 498 and CSA |

**Environmental**

| | |
|---|---|
| Flammability | UL 94 V-0 |
| Operating Temperatures | Maximum continuous 75°C; minimum -40°C (w/o impact) |

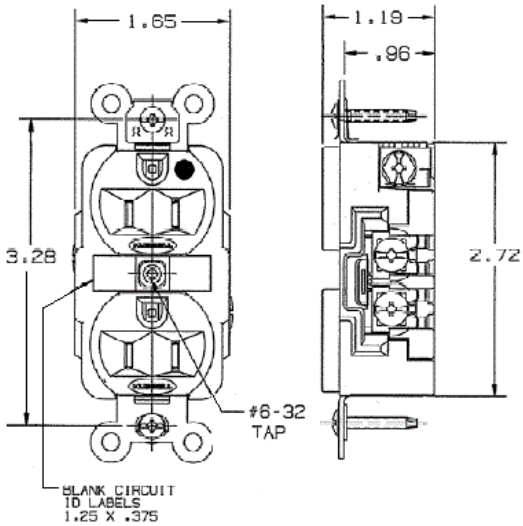


## Accessories

Wallplate or Weatherproof Cover Duplex Opening

## Resources

Customer Use Drawing
eCatalog

Dimensions in Inches (mm)



HUBBELL® Wiring Device-Kellems